Module 4

Short Circuit analysis

4.1 $\bar{\mathbf{Z}}_{\mathrm{BUS}}$ formation without mutual coupling between elements

For a network with 'm' buses and a reference bus, one can write a relation between bus currents and bus voltages as

$$\left[\bar{\mathbf{I}}_{\mathbf{BUS}}\right] = \left[\bar{\mathbf{Y}}_{\mathbf{BUS}}\right]\left[\bar{\mathbf{V}}_{\mathbf{BUS}}\right] \tag{4.1}$$

Where,

$\bar{\mathbf{I}}_{\mathbf{BUS}}$ is $(m \times 1)$ bus current injection vector

$\bar{\mathbf{V}}_{\mathbf{BUS}}$ is $(m \times 1)$ bus voltage vector

$\bar{\mathbf{Y}}_{\mathbf{BUS}}$ is $(m \times m)$ bus admittence matrix

equation (4.1) can also be written as

$$\left[\bar{\mathbf{V}}_{\mathbf{BUS}}\right] = \left[\bar{\mathbf{Z}}_{\mathbf{BUS}}\right]\left[\bar{\mathbf{I}}_{\mathbf{BUS}}\right] \tag{4.2}$$

Where,

$\bar{\mathbf{Z}}_{\mathbf{BUS}}$ is $m \times m$ bus impedance matrix and is given by,

$$\left[\bar{\mathbf{Z}}_{\mathbf{BUS}}\right] = \left[\bar{\mathbf{Y}}_{\mathbf{BUS}}\right]^{-1}$$

From equation (4.2) for the ith bus one can write

$$\bar{V}_i = \bar{Z}_{i1}\bar{I}_1 + \bar{Z}_{i2}\bar{I}_2 + \cdots \bar{Z}_{ii}\bar{I}_i + \cdots + \bar{Z}_{im}\bar{I}_m \tag{4.3}$$

From equation (4.3), $\bar{Z}_{ij}$ can be written as

$$\bar{Z}_{ij} = \left.\frac{\bar{V}_i}{\bar{I}_j}\right|_{\bar{I}_k = 0;\ \forall\ k = 1, 2, \cdots m,\ \neq j} \tag{4.4}$$

$$\bar{Z}_{ii} = \left.\frac{\bar{V}_i}{\bar{I}_i}\right|_{\bar{I}_k = 0;\ \forall\ k = 1, 2, \cdots m,\ \neq i} \tag{4.5}$$

Following points should be noted for the $\bar{\mathbf{Z}}_{\mathbf{BUS}}$ matrix

- $\bar{Z}_{ij}$ is the off-diagonal element of $\bar{\mathbf{Z}}_{\mathbf{BUS}}$ matrix and is called the 'open-circuit transfer impedance' between i^{th} and j^{th} bus.
- $\bar{Z}_{ii}$ is the diagonal element of $\bar{\mathbf{Z}}_{\mathbf{BUS}}$ matrix and is called the 'open-circuit driving point impedance' of ith bus.
- If the $\bar{\mathbf{Y}}_{\mathbf{BUS}}$ matrix is symmetrical, then the matrix $\bar{\mathbf{Z}}_{\mathbf{BUS}}$ is also symmetrical i.e. $\bar{Z}_{ik} = \bar{Z}_{ki}$.
- Since in a power network each bus is connected to very few other buses,the $\bar{\mathbf{Y}}_{\mathbf{BUS}}$ matrix of the network has large number of zero elements and is therefore, sparse in nature. The $\mathbf{Z}_{\mathbf{BUS}}$, matrix on the other hand, is invariably a full matrix.

The $\bar{\mathbf{Z}}_{\mathbf{BUS}}$ matrix of a network can be found out by inverting the $\bar{\mathbf{Y}}_{\mathbf{BUS}}$ matrix of the network. This is not an efficient method as every time there is a modification in the network, the $\bar{\mathbf{Y}}_{\mathbf{BUS}}$ matrix is modified and inversion has to be done again to obtain the modified the $\bar{\mathbf{Z}}_{\mathbf{BUS}}$ matrix.

A step-by-step $\bar{\mathbf{Z}}_{\mathbf{BUS}}$ building algorithm overcomes these problems. It avoids the inversion process and network modifications are easily incorporated in the existing $\bar{\mathbf{Z}}_{\mathbf{BUS}}$.

Few terms need to be defined before the step by step process can be explained. These are :

- **Graph** : The graph of a network describes the geometrical structure of the network showing the interconnections of network elements.
- **Tree** : A tree of a graph is a connected sub graph that connects all the nodes without forming a closed path or a loop. A graph can have a number of distinct trees.
- **Branches** : The elements of a tree are called branches. The number of branches 'b' of a tree with 'n' nodes, including reference, is given by

$$b = n - 1 \tag{4.6}$$

- **Links** : The elements of a graph not included in the tree of the graph are called links. Each link is associated with a loop. If 'e' is the number of elements in a graph, then the number of links 'ℓ' is given by

$$\ell = e - b = e - n + 1 \tag{4.7}$$

The above definitions are explained with the help of illustrations as shown below :

Fig. 4.1 is a single line diagram of a power system. It has 4 buses, bus(1) to bus(4) and six elements *element* e_1 *to element* e_6 . In this figure, bus(0) is taken as the reference bus.

Fig. 4.2 shows the graph of the network depicting the interconnection of the elements and the reference node.

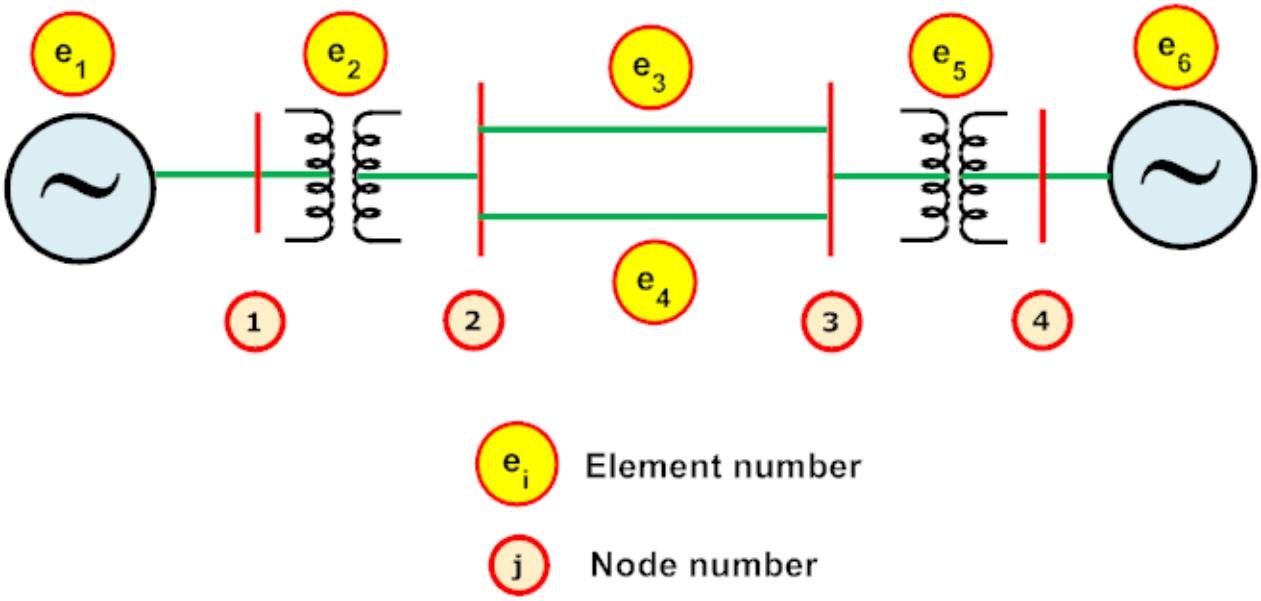

Figure 4.1: Single Line Diagram of a Power System

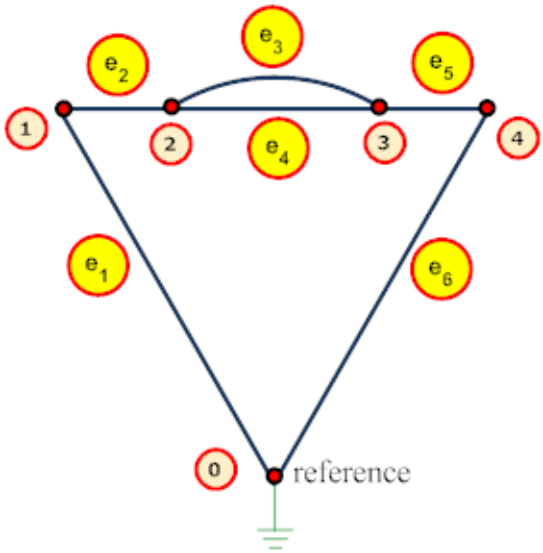

Figure 4.2: A graph of the Power system of Fig. 4.1

A tree of the graph of Fig. 4.2 is shown in Fig. 4.3. The branches and the links have been shown with solid lines and dotted lines respectively.

Following points should be noted from Fig. 4.3 :

- The total number of nodes (including reference node) is 5 (i.e. $n = 5$)
- The number of branches is $b = n - 1 = 5 - 1 = 4$. As can be as in Fig. 4.3 where

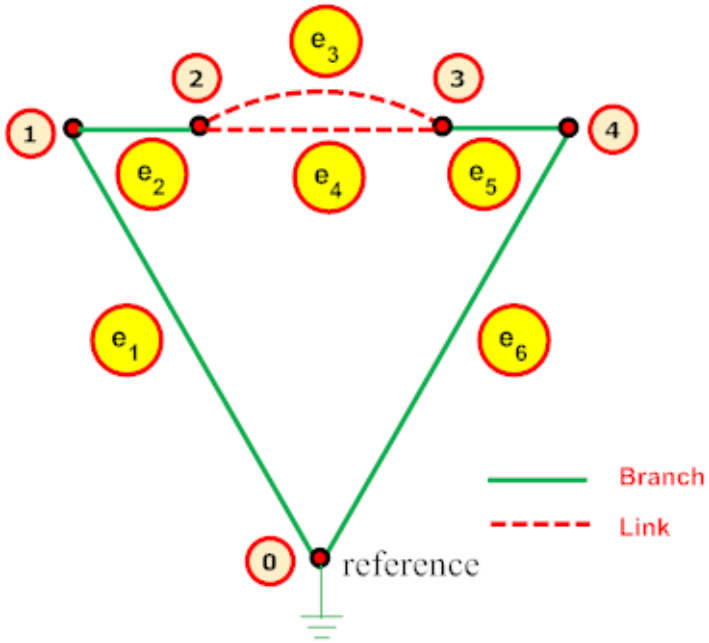

Figure 4.3: A tree of the graph of Fig. 4.2

e_1, e_2, e_5, e_6, are such a set of branches that form a tree of the graph.

- The total number of elements in the graph is $e = 6$.
- The number of links is $\ell = e - n + 1 = 6 - 5 + 1 = 2$. The two links in the graph are e_3 and e_4 shown with dotted lines in Fig. 4.3.

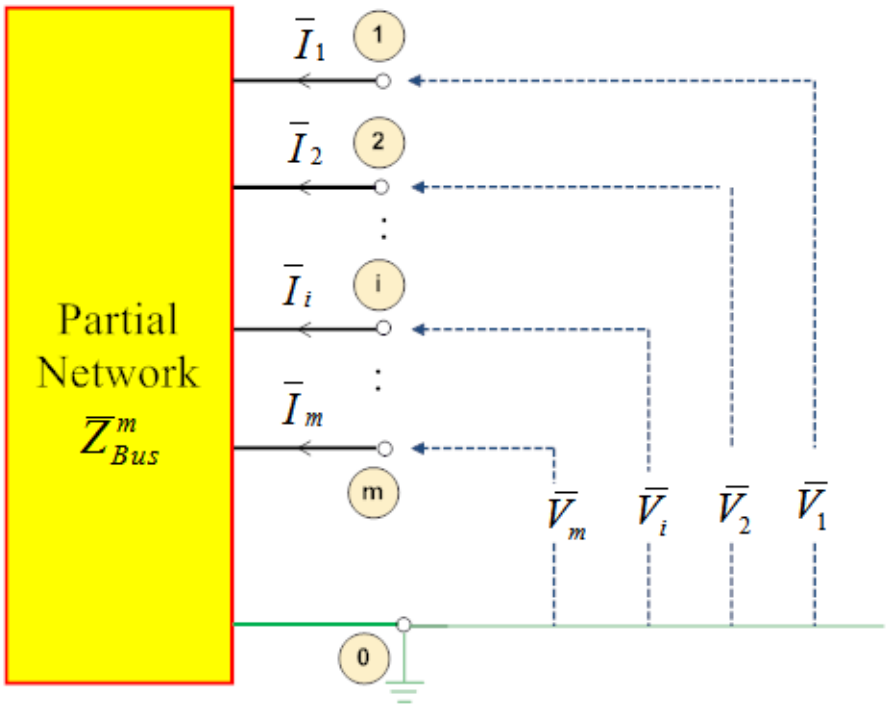

Figure 4.4: Partial network with 'm' buses

The bus impedance matrix is built up starting with a branch connected to the reference and subsequently the elements are added one by one till all the nodes and elements are considered. Let

us assume that the $\bar{\mathbf{Z}}_{\mathbf{BUS}}$ matrix for a partial network with 'm' buses and a reference bus '0', as shown in Fig. 4.4, exists.

The bus voltages and bus currents for the partial network satisfy the relation

$$\left[\bar{\mathbf{V}}^{\mathbf{m}}_{\mathbf{BUS}}\right] = \left[\bar{\mathbf{Z}}^{\mathbf{m}}_{\mathbf{BUS}}\right]\left[\bar{\mathbf{I}}^{\mathbf{m}}_{\mathbf{BUS}}\right] \tag{4.8}$$

Where,

$\bar{\mathbf{V}}^{\mathbf{m}}_{\mathbf{BUS}}$ is $m \times 1$ bus voltage vector

$\bar{\mathbf{I}}^{\mathbf{m}}_{\mathbf{BUS}}$ is $m \times 1$ bus current injection vector

$\bar{\mathbf{Z}}^{\mathbf{m}}_{\mathbf{BUS}}$ is $m \times m$ bus impedence matrix of the partial network

To build $\bar{\mathbf{Z}}_{\mathbf{BUS}}$, one element at a time is added to the partial network, till all the elements are added to the network. The added element may be a branch or a link and hence the four possible element additions to a partial network are:

a. Addition of a branch between a new node and the reference

b. Addition of a branch between a new node and an existing node

c. Addition of a link between an existing node and the reference

d. Addition of a link between two existing nodes

Let us now discuss these four cases one-by-one in detail.

4.1.1 Addition of a branch between a new node and the reference node (case 1):

Fig. 4.5 shows the addition of a branch between a new node 'q' and the reference '0'.The addition of a new node to the partial network increases the size of $\bar{\mathbf{Z}}_{\mathbf{BUS}}$ to $(m+1)\times(m+1)$ with the addition of a new row and a new column corresponding to the new node 'q', Let the impedance of this branch be $\bar{z}_{q0}$. The new network equation can be written as:

$$\begin{bmatrix} \bar{V}_1 \\ \bar{V}_2 \\ \vdots \\ \bar{V}_p \\ \vdots \\ \bar{V}_m \\ \cdots \\ \bar{V}_q \end{bmatrix} = \begin{bmatrix} \bar{Z}_{11} & \bar{Z}_{12} & \cdots & \bar{Z}_{1p} & \cdots & \bar{Z}_{1m} & \vdots & \bar{Z}_{1q} \\ \bar{Z}_{21} & \bar{Z}_{22} & \cdots & \bar{Z}_{2p} & \cdots & \bar{Z}_{2m} & \vdots & \bar{Z}_{2q} \\ \vdots & & & & & & \vdots & \\ \bar{Z}_{p1} & \bar{Z}_{p2} & \cdots & \bar{Z}_{pp} & \cdots & \bar{Z}_{pm} & \vdots & \bar{Z}_{pq} \\ \vdots & & & & & & & \\ \bar{Z}_{m1} & \bar{Z}_{m2} & \cdots & \bar{Z}_{mp} & \cdots & \bar{Z}_{mm} & \vdots & \bar{Z}_{mq} \\ \cdots & \cdots & \cdots & \cdots & \cdots & \cdots & \cdots & \cdots \\ \bar{Z}_{q1} & \bar{Z}_{q2} & \cdots & \bar{Z}_{qp} & \cdots & \bar{Z}_{qm} & \vdots & \bar{Z}_{qq} \end{bmatrix} \begin{bmatrix} \bar{I}_1 \\ \bar{I}_2 \\ \vdots \\ \bar{I}_p \\ \vdots \\ \bar{I}_m \\ \cdots \\ \bar{I}_q \end{bmatrix} \tag{4.9}$$

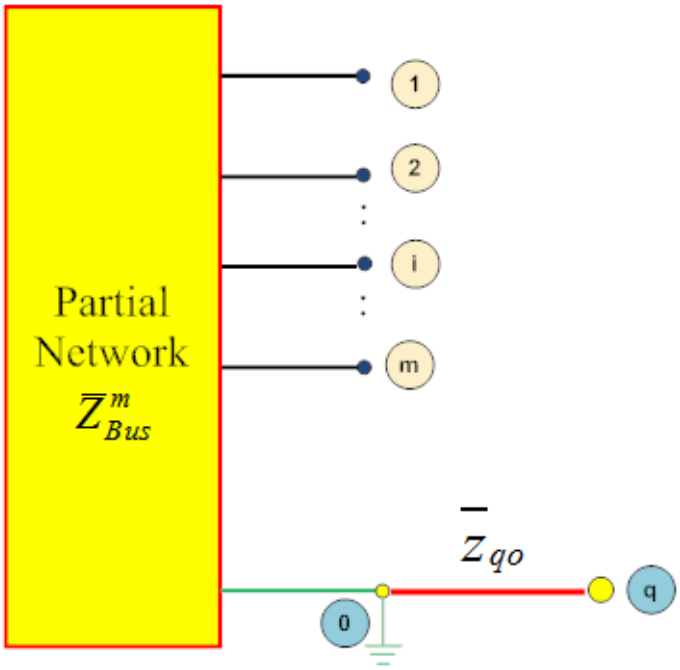

Figure 4.5: Addition of a branch between a new node and the reference

The addition of branch does not change the elements of the original matrix $\bar{\mathbf{Z}}_{\mathbf{BUS}}$. Only the elements of the added new row and column corresponding to q^{th} bus need to be calculated. Further,since the power system elements are linear and bilateral, $\bar{Z}_{qi} = \bar{Z}_{iq}, \ \forall \ i = 1, \ 2, \ \cdots m$.

Now since,

$$\bar{Z}_{qq} = \left.\frac{\bar{V}_q}{\bar{I}_q}\right|_{\bar{I}_k = 0; \ \forall \ k = 1, 2, \cdots m}$$

a current source of $\bar{I}_q = 1$ p.u is connected to the qth bus, with all the others buses open, and the voltage of qth bus ($\bar{V}_q$) is computed, as shown in Fig. 4.6.

From Fig. 4.6 one gets $\bar{V}_q = \bar{z}_{q0}\bar{I}_q$, and thus with $\bar{I}_q = 1 \ p.u.$

$$\bar{Z}_{qq} = \left.\frac{\bar{V}_q}{\bar{I}_q}\right|_{\bar{I}_k = 0; \ \forall \ k = 1, 2, \cdots m,} = \bar{z}_{qo}$$

For finding out $\bar{Z}_{qi}$, a current source $\bar{I}_i = 1$ p.u. is connected between i^{th} bus and the reference bus with all other buses open circuited as shown in Fig. 4.7.

From Fig. 4.7 , $\bar{V}_q = 0$, and hence with $\bar{I}_i = 1 \ p.u.$

$$\bar{Z}_{qi} = \left.\frac{\bar{V}_q}{\bar{I}_i}\right|_{\bar{I}_k = 0; \ \forall \ k = 1, 2, \cdots m, \ \neq i} = 0$$

This implies that all the off-diagonal elements $\bar{Z}_{q1}, \ \bar{Z}_{q2}, \ \cdots \bar{Z}_{mq}$ and $\bar{Z}_{1q}, \ \bar{Z}_{2q}, \ \cdots \bar{Z}_{qm}$ are equal to zero.

Hence, the modified $\bar{\mathbf{Z}}_{\mathbf{Bus}}$ matrix after addition of an element between the new bus 'q' and the

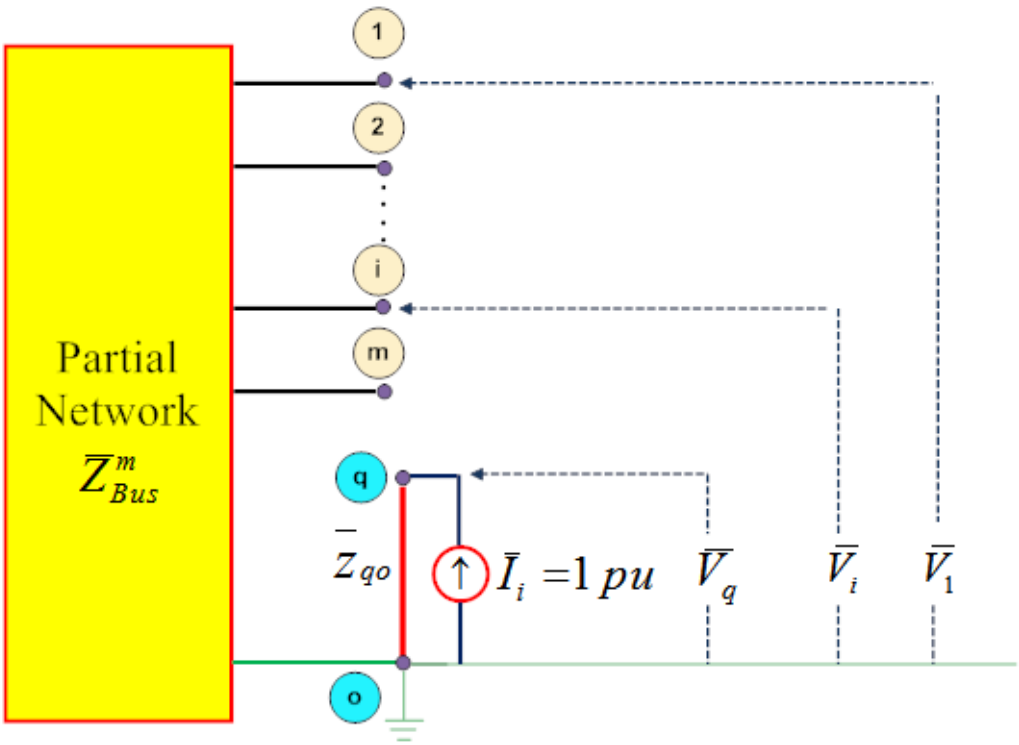

Figure 4.6: Calculation of $\bar{Z}_{qq}$ for Case 1

reference bus '0′ is given as,

$$\bar{\mathbf{Z}}_{\mathbf{BUS}} = \begin{bmatrix} \bar{Z}_{11} & \bar{Z}_{12} & \cdots & \bar{Z}_{1p} & \cdots & \bar{Z}_{1m} & 0 \\ \bar{Z}_{21} & \bar{Z}_{22} & \cdots & \bar{Z}_{2p} & \cdots & \bar{Z}_{2m} & 0 \\ \vdots & & & & & & \\ \bar{Z}_{p1} & \bar{Z}_{p2} & \cdots & \bar{Z}_{pp} & \cdots & \bar{Z}_{pm} & 0 \\ \vdots & & & & & & \\ \bar{Z}_{m1} & \bar{Z}_{m2} & \cdots & \bar{Z}_{mp} & \cdots & \bar{Z}_{mm} & 0 \\ 0 & 0 & \cdots & 0 & \cdots & 0 & \bar{z}_{qo} \end{bmatrix} \tag{4.10}$$

4.1.2 Addition of a branch between a new node and an existing node (Case 2):

Let a branch with impedance $\bar{z}_{pq}$ be connected between an existing node 'p' and a new node 'q' as shown in Fig. 4.8. In this case also, the size of $\bar{\mathbf{Z}}_{\mathbf{Bus}}$ matrix increases by one to $(m+1)\times(m+1)$ due to the addition of a new node 'q' to the network. The modified network equations can be written

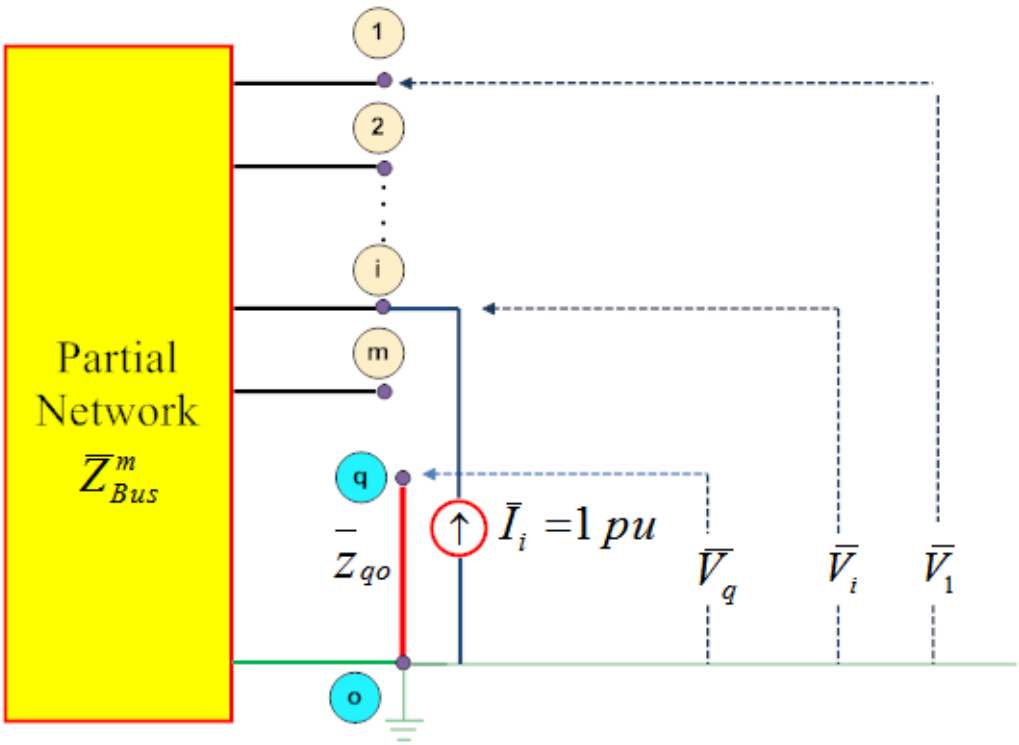

Figure 4.7: Calculation of $\bar{Z}_{qi}$ for case 1

as:

$$\begin{bmatrix} \bar{V}_1 \\ \bar{V}_2 \\ \vdots \\ \bar{V}_p \\ \vdots \\ \bar{V}_m \\ \cdots \\ \bar{V}_q \end{bmatrix} = \begin{bmatrix} \bar{Z}_{11} & \bar{Z}_{12} & \cdots & \bar{Z}_{1p} & \cdots & \bar{Z}_{1m} & \vdots & \bar{Z}_{1q} \\ \bar{Z}_{21} & \bar{Z}_{22} & \cdots & \bar{Z}_{2p} & \cdots & \bar{Z}_{2m} & \vdots & \bar{Z}_{2q} \\ \vdots & & & & & & \vdots & \\ \bar{Z}_{p1} & \bar{Z}_{p2} & \cdots & \bar{Z}_{pp} & \cdots & \bar{Z}_{pm} & \vdots & \bar{Z}_{pq} \\ \vdots & & & & & & \vdots & \\ \bar{Z}_{m1} & \bar{Z}_{m2} & \cdots & \bar{Z}_{mp} & \cdots & \bar{Z}_{mm} & \vdots & \bar{Z}_{mq} \\ \cdots & \cdots & \cdots & \cdots & \cdots & \cdots & \cdots & \cdots \\ \bar{Z}_{q1} & \bar{Z}_{q2} & \cdots & \bar{Z}_{qp} & \cdots & \bar{Z}_{qm} & \vdots & \bar{Z}_{qq} \end{bmatrix} \begin{bmatrix} \bar{I}_1 \\ \bar{I}_2 \\ \vdots \\ \bar{I}_p \\ \vdots \\ \bar{I}_m \\ \cdots \\ \bar{I}_q \end{bmatrix} \tag{4.11}$$

Even after the addition of branch p-q, the original matrix $\bar{\mathbf{Z}}^{\mathbf{m}}_{\mathbf{Bus}}$ remains unchanged. Only the additional elements corresponding to the qth row and column need to be calculated.

For calculating $\bar{Z}_{qq}$ one can write

$$\bar{Z}_{qq} = \left.\frac{\bar{V}_q}{\bar{I}_q}\right|_{\bar{I}_k = 0;\ \forall\ k = 1, 2, \cdots m}$$

To evaluate $\bar{Z}_{qq}$ current source of $\bar{I}_q$ = 1 p.u is connected to the qth bus, with all the others buses open circuited, and the voltage of qth bus $\bar{V}_q$ is computed, as shown in Fig. 4.9. From Fig. 4.9 with

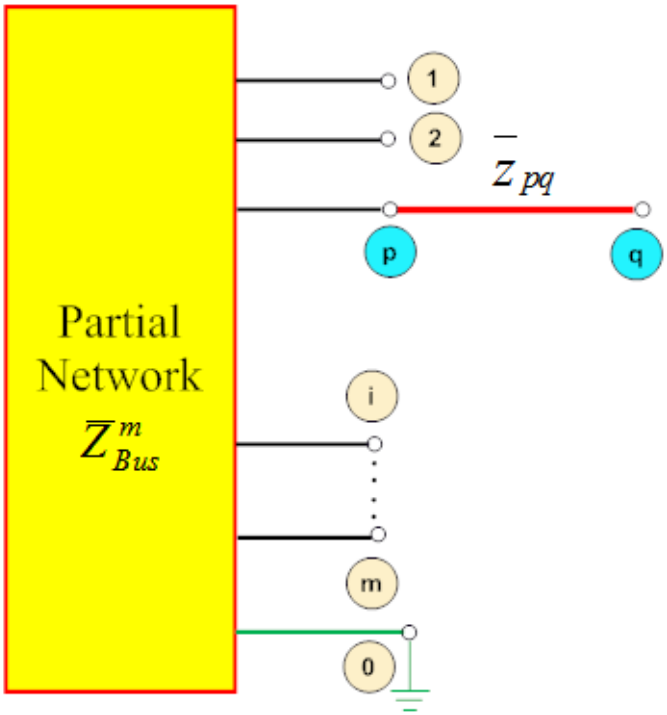

Figure 4.8: Addition of a branch between an existing node 'p' and a new node 'q'

$\bar{I}_q = 1\ p.u.$ and $\bar{I}_k = 0,\ \forall\ k = 1,\ 2,\ \cdots,\ m$ one can write,

$$\left.\begin{aligned} \bar{V}_1 &= \bar{Z}_{1q}\bar{I}_q = \bar{Z}_{1q} \\ \bar{V}_2 &= \bar{Z}_{2q}\bar{I}_q = \bar{Z}_{2q} \\ &\vdots \\ \bar{V}_p &= \bar{Z}_{pq}\bar{I}_q = \bar{Z}_{pq} \\ &\vdots \\ \bar{V}_m &= \bar{Z}_{mq}I_q = \bar{Z}_{mq} \\ \bar{V}_q &= \bar{Z}_{qq}\bar{I}_q = \bar{Z}_{qq} \end{aligned}\right\} \tag{4.12}$$

From the Fig. 4.10, the voltages $\bar{V}_p$ and $\bar{V}_q$ can be related as

$$\bar{V}_q = \bar{V}_p - \bar{v}_{pq} = \bar{Z}_{pq}\bar{I}_q - \bar{z}_{pq}\bar{i}_{pq} = \bar{Z}_{pq} + \bar{z}_{pq} \tag{4.13}$$

Because, from the Fig. 4.10 , $\bar{i}_{pq} = -\bar{I}_q = -1\ pu$ and from equation (4.12) $\bar{V}_p = \bar{Z}_{pq}$ and $\bar{V}_q = \bar{Z}_{qq}$. Thus,

$$\boxed{\bar{Z}_{qq} = \bar{Z}_{pq} + \bar{z}_{pq}} \tag{4.14}$$

For calculating $\bar{Z}_{qi}$ one can write

$$\bar{Z}_{qi} = \left.\frac{\bar{V}_q}{\bar{I}_i}\right|_{\bar{I}_k = 0;\ \forall\ k = 1, 2, \cdots m,\ \neq i}$$

Hence, to compute $\bar{Z}_{qi}$ a current source of $\bar{I}_1 = 1$ p.u is connected to the ith bus, with all the others

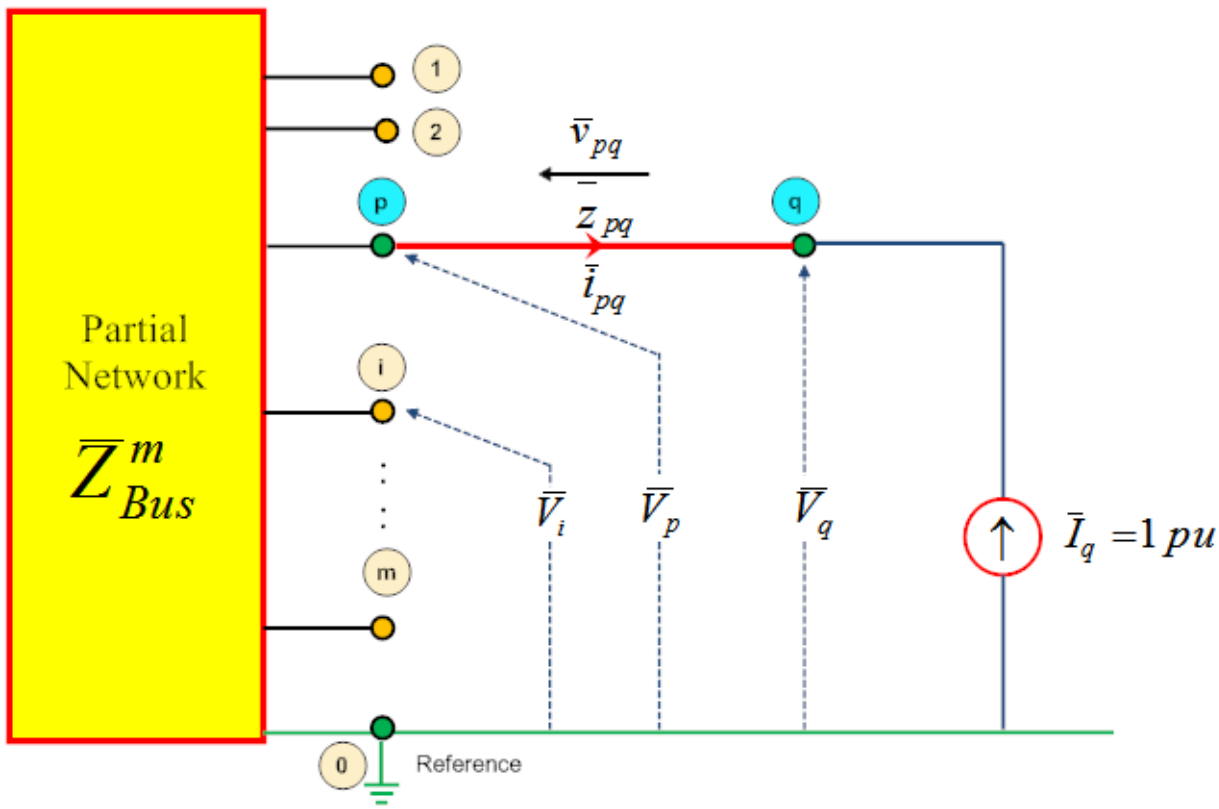

Figure 4.9: Calculation of $\bar{Z}_{qq}$

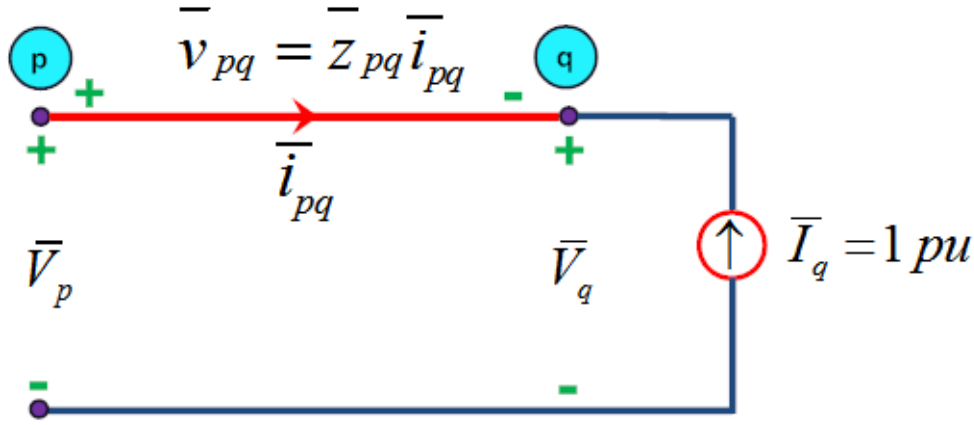

Figure 4.10: Relation between $\bar{V}_p$ and $\bar{V}_q$

buses open circuited, and the bus voltage $\bar{V}_i$ is computed for all the buses, as shown in Fig. 4.11. From equation (4.11) one gets

$$\left.\begin{array}{c}
\bar{V}_1 = \bar{Z}_{1i}\bar{I}_i = \bar{Z}_{1i} \\
\bar{V}_2 = \bar{Z}_{2i}\bar{I}_i = \bar{Z}_{2i} \\
\vdots \\
\bar{V}_p = \bar{Z}_{pi}\bar{I}_i = \bar{Z}_{pi} \\
\vdots \\
\bar{V}_m = \bar{Z}_{mi}I_i = \bar{Z}_{mi} \\
\bar{V}_q = \bar{Z}_{qi}\bar{I}_i = \bar{Z}_{qi}
\end{array}\right\}$$

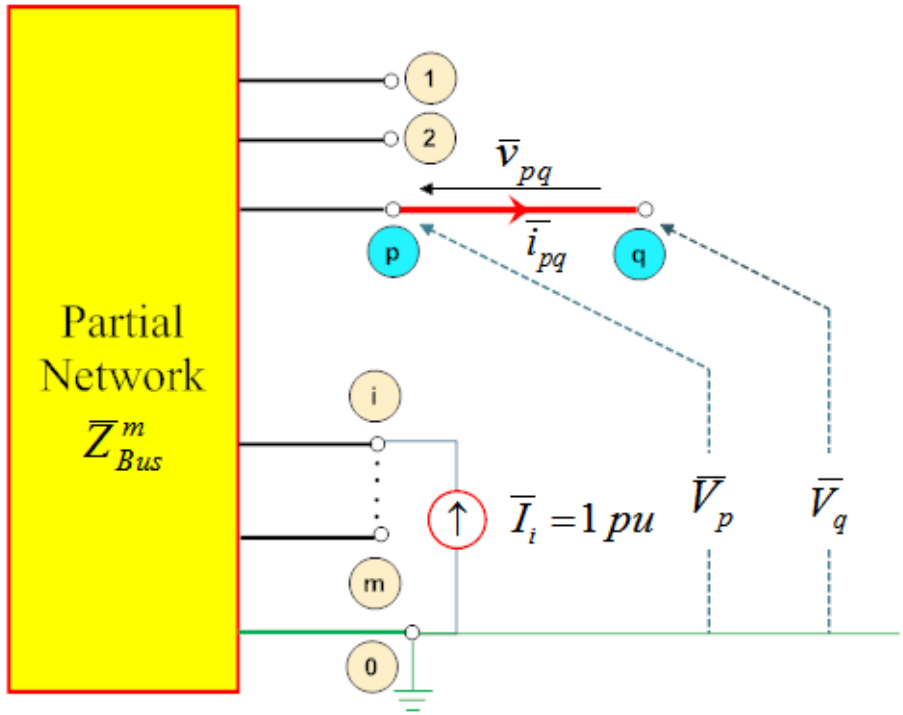

Figure 4.11: Calculation of $\bar{Z}_{qi}$ for case 2

From Fig. 4.11, $\bar{V}_q = \bar{V}_p$ as the current in the branch $p-q$ is zero. Hence, from the above equations one gets

$$\boxed{\bar{Z}_{qi} = \bar{Z}_{pi};\ \forall\ i\ =\ 1,\ 2,\ \cdots m} \tag{4.15}$$

Hence, the modified $\bar{\mathbf{Z}}_{\mathbf{Bus}}$ matrix after addition of an element between an existing bus 'p' the new bus 'q' is given as,

$$\bar{\mathbf{Z}}_{\mathbf{BUS}} = \begin{bmatrix} \bar{Z}_{11} & \bar{Z}_{12} & \cdots & \bar{Z}_{1p} & \cdots & \bar{Z}_{1m} & \bar{Z}_{1p} \\ \bar{Z}_{21} & \bar{Z}_{22} & \cdots & \bar{Z}_{2p} & \cdots & \bar{Z}_{2m} & \bar{Z}_{2p} \\ \vdots & & & & & & \\ \bar{Z}_{p1} & \bar{Z}_{p2} & \cdots & \bar{Z}_{pp} & \cdots & \bar{Z}_{pm} & \bar{Z}_{pp} \\ \vdots & & & & & & \\ \bar{Z}_{m1} & \bar{Z}_{m2} & \cdots & \bar{Z}_{mp} & \cdots & \bar{Z}_{mm} & \bar{Z}_{mp} \\ \bar{Z}_{p1} & \bar{Z}_{p2} & \cdots & \bar{Z}_{pp} & \cdots & \bar{Z}_{pm} & \bar{Z}_{pq} + \bar{z}_{qp} \end{bmatrix} \tag{4.16}$$

So far in this lecture, we have considered the cases of addition of branches only. In the next lecture we will consider the case of addition of links.

4.1.3 Addition of a link between an existing node and the reference node (Case 3):

When an element is connected between an existing node and the reference, it creates a loop and thus, the addition of this element is equivalent to the addition of a link. This will not generate any new node and the size of modified $\bar{\mathbf{Z}}_{\mathbf{Bus}}$ matrix remains unchanged. However, all the elements are modified and need to be recalculated. Let the added element,with an impedance of $\bar{z}_{qo}$, be connected between an existing node 'q' and the reference node '0' as shown in the Fig. 4.12. $\bar{I}_\ell$ is the current

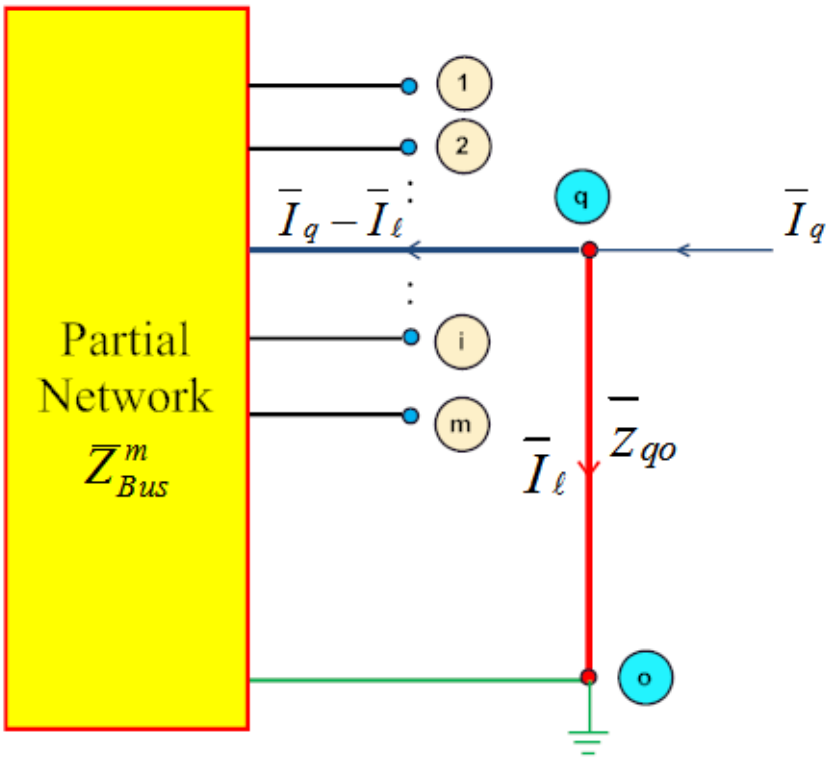

Figure 4.12: Addition of a link between an existing node '**q**' and the reference

through the link as shown in the Fig. 4.12. This current modifies the current injected into q^{th} bus from $\bar{I}_q$ to $\bar{I}_q - \bar{I}_\ell$. The modified network equations can be written as,

$$\left.\begin{array}{lcl} \bar{V}_1 & = & \bar{Z}_{11}\bar{I}_1 + \bar{Z}_{12}\bar{I}_2 + \cdots + \bar{Z}_{1q}(\bar{I}_q - \bar{I}_\ell) + \cdots + \bar{Z}_{1m}\bar{I}_m \\ \vdots & & \vdots \\ \bar{V}_q & = & \bar{Z}_{q1}\bar{I}_1 + \bar{Z}_{q2}\bar{I}_2 + \cdots + \bar{Z}_{qq}(\bar{I}_q - \bar{I}_\ell) + \cdots + \bar{Z}_{qm}\bar{I}_m \\ \vdots & & \vdots \\ \bar{V}_m & = & \bar{Z}_{m1}\bar{I}_1 + \bar{Z}_{m2}\bar{I}_2 + \cdots + \bar{Z}_{mq}(\bar{I}_q - \bar{I}_\ell) + \cdots + \bar{Z}_{mm}\bar{I}_m \end{array}\right\} \tag{4.17}$$

Also

$$\bar{V}_q = \bar{z}_{qo}\bar{I}_\ell \tag{4.18}$$

Substuting $\bar{V}_q$ from the equation (4.17) into the equation (4.18) one can write

$$\bar{Z}_{q1}\bar{I}_1 + \bar{Z}_{q2}\bar{I}_2 + \cdots + \bar{Z}_{qq}(\bar{I}_q - \bar{I}_\ell) + \cdots + \bar{Z}_{qm}\bar{I}_m = \bar{z}_{qo}\bar{I}_\ell$$

or

$$0 = -\bar{Z}_{q1}\bar{I}_1 - \bar{Z}_{q2}\bar{I}_2 - \cdots - \bar{Z}_{qq}\bar{I}_q + \cdots - \bar{Z}_{qm}\bar{I}_m + (\bar{Z}_{qq} + \bar{z}_{qo})\bar{I}_\ell \tag{4.19}$$

Equations equation (4.17) and equation (4.19) together form the set of (m + 1) simultaneous network equations which can be expressed in matrix form as:

$$\begin{bmatrix} \bar{V}_1 \\ \bar{V}_2 \\ \vdots \\ \bar{V}_q \\ \vdots \\ \bar{V}_m \\ \cdots \\ 0 \end{bmatrix} = \begin{bmatrix} \bar{Z}_{11} & \bar{Z}_{12} & \cdots & \bar{Z}_{1q} & \cdots & \bar{Z}_{1m} & \vdots & -\bar{Z}_{1q} \\ \bar{Z}_{21} & \bar{Z}_{22} & \cdots & \bar{Z}_{2q} & \cdots & \bar{Z}_{2m} & \vdots & -\bar{Z}_{2q} \\ \vdots & & & & & & \vdots & \\ \bar{Z}_{q1} & \bar{Z}_{q2} & \cdots & \bar{Z}_{qq} & \cdots & \bar{Z}_{qm} & \vdots & -\bar{Z}_{qq} \\ \vdots & & & & & & \vdots & \\ \bar{Z}_{m1} & \bar{Z}_{m2} & \cdots & \bar{Z}_{mq} & \cdots & \bar{Z}_{mm} & \vdots & -\bar{Z}_{mq} \\ \cdots & \cdots & \cdots & \cdots & \cdots & \cdots & \cdots & \cdots \\ -\bar{Z}_{q1} & -\bar{Z}_{q2} & \cdots & -\bar{Z}_{qq} & \cdots & -\bar{Z}_{qm} & \vdots & \bar{Z}_{qq} + \bar{z}_{qo} \end{bmatrix} \begin{bmatrix} \bar{I}_1 \\ \bar{I}_2 \\ \vdots \\ \bar{I}_q \\ \vdots \\ \bar{I}_m \\ \cdots \\ \bar{I}_\ell \end{bmatrix} \tag{4.20}$$

The link current $\bar{I}_\ell$ has to be eliminated and hence, the last row and column of modified $\bar{\mathbf{Z}}_{\mathbf{Bus}}$ matrix have to be eliminated. The partitioned matrix relation of equation (4.20) can be written in compact form as:

$$\begin{bmatrix} [\bar{\mathbf{V}}^{\mathbf{m}}_{\mathbf{Bus}}] \\ \hline \mathbf{0} \end{bmatrix} = \begin{array}{c} \\ (\mathbf{m}) \\ (\mathbf{1}) \end{array} \begin{array}{c} \begin{array}{cc} (\mathbf{m}) & (\mathbf{1}) \end{array} \\ \left[\begin{array}{c|c} \bar{\mathbf{Z}}^{\mathbf{m}}_{\mathbf{Bus}} & [\boldsymbol{\Delta}\bar{\mathbf{Z}}] \\ \hline [\boldsymbol{\Delta}\bar{\mathbf{Z}}]^{\mathbf{T}} & \bar{Z}_{\ell\ell} \end{array}\right] \end{array} \begin{bmatrix} \bar{\mathbf{I}}^{\mathbf{m}}_{\mathbf{Bus}} \\ \hline \bar{I}_\ell \end{bmatrix} \tag{4.21}$$

where,

$$[\boldsymbol{\Delta}\bar{\mathbf{Z}}] = \left[-\bar{Z}_{1q} - \bar{Z}_{2q} \cdots - \bar{Z}_{qq} \cdots - \bar{Z}_{mm}\right]^T$$

From equation (4.20) one can write

$$0 = [\bar{\boldsymbol{\Delta}}\mathbf{Z}]^{\mathbf{T}}[\bar{\mathbf{I}}^{\mathbf{m}}_{\mathbf{Bus}}] + \bar{Z}_{\ell\ell}\bar{I}_\ell$$

or,

$$\bar{I}_\ell = -\frac{[\bar{\boldsymbol{\Delta}}\mathbf{Z}]^{\mathbf{T}}[\bar{\mathbf{I}}^{\mathbf{m}}_{\mathbf{Bus}}]}{\bar{Z}_{\ell\ell}} \tag{4.22}$$

From equation (4.21) one can also write,

$$[\bar{\mathbf{V}}^{\mathbf{m}}_{\mathbf{Bus}}] = [\bar{\mathbf{Z}}^{\mathbf{m}}_{\mathbf{Bus}}][\bar{\mathbf{I}}_{\mathbf{Bus}}] + [\bar{\boldsymbol{\Delta}}\mathbf{Z}]\bar{I}_\ell \tag{4.23}$$

Substituting $\bar{I}_\ell$ from equation (4.22) into equation (4.23) one obtains,

$$[\bar{\mathbf{V}}^{\mathbf{m}}_{\mathbf{Bus}}] = \left[[\bar{\mathbf{Z}}^{\mathbf{m}}_{\mathbf{Bus}}] - \frac{[\bar{\boldsymbol{\Delta}}\mathbf{Z}][\bar{\boldsymbol{\Delta}}\mathbf{Z}]^{\mathbf{T}}}{\bar{Z}_{\ell\ell}}\right][\bar{\mathbf{I}}^{\mathbf{m}}_{\mathbf{Bus}}] \tag{4.24}$$

Hence,

$$[\bar{\mathbf{V}}^{\mathbf{m}}_{\mathbf{Bus}}] = [\bar{\mathbf{Z}}_{\mathbf{Bus}}][\bar{\mathbf{I}}^{\mathbf{m}}_{\mathbf{Bus}}] \tag{4.25}$$

where

$$\boxed{[\bar{\mathbf{Z}}_{\mathbf{Bus}}] = \left[[\bar{\mathbf{Z}}^{\mathbf{m}}_{\mathbf{Bus}}] - \frac{[\Delta\bar{\mathbf{Z}}][\Delta\bar{\mathbf{Z}}]^{\mathbf{T}}}{\bar{Z}_{\ell\ell}}\right]} \tag{4.26}$$

It is worth observing that the $[\bar{\mathbf{Z}}_{\mathbf{Bus}}]$ matrix is an $m \times m$ matrix i.e. the size of the $[\bar{\mathbf{Z}}_{\mathbf{Bus}}]$ matrix does not increase when a link is added to the partial network of 'm' buses as no new node is created.

4.1.4 Addition of a link between two existing nodes (Case 4):

Let an element with impedance $\bar{z}_{pq}$ be connected between two existing nodes 'p' and 'q'. This is an addition of a link as it forms a loop encompassing nodes 'p' and 'q' as shown in Fig. 4.13. Let $\bar{I}_\ell$

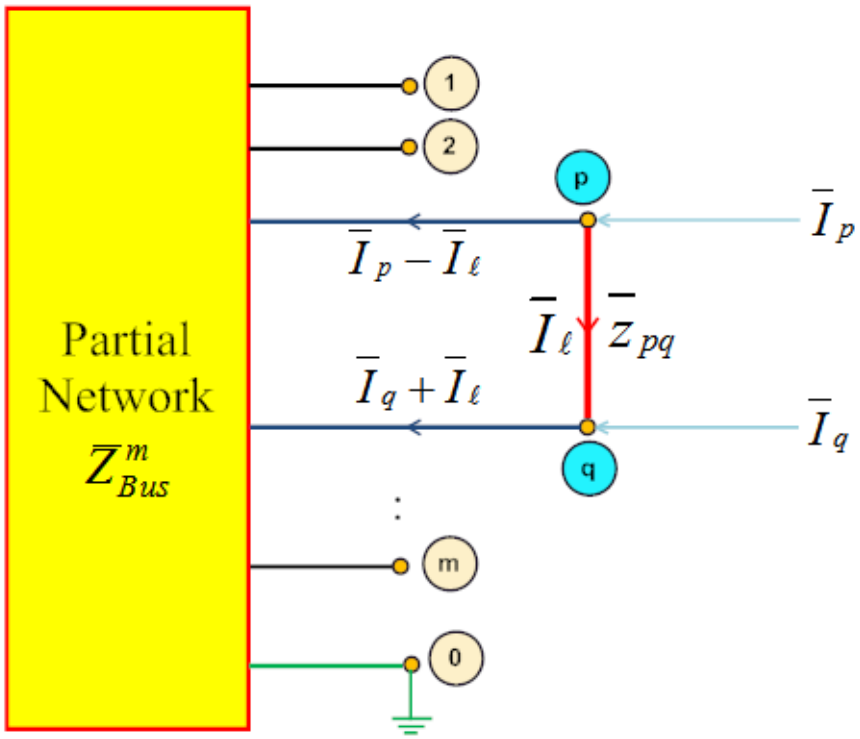

Figure 4.13: Addition of a link between two existing nodes 'p' and 'q'

be the current through the link as shown in the Fig. 4.13. This link current changes the injected current at p^{th} node from $\bar{I}_p$ to $(\bar{I}_p - \bar{I}_\ell)$, while the injected current at node q^{th} is modified from $\bar{I}_q$ to $(\bar{I}_q + \bar{I}_\ell)$. The modified network equations can be written as:

$$\left.\begin{aligned}
\bar{V}_1 &= \bar{Z}_{11}\bar{I}_1 + \bar{Z}_{12}\bar{I}_2 + \cdots + \bar{Z}_{1p}(\bar{I}_p - \bar{I}_l) + \cdots + \bar{Z}_{1q}(\bar{I}_q + \bar{I}_\ell) + \cdots + \bar{Z}_{1m}\bar{I}_m \\
&\vdots \\
\bar{V}_p &= \bar{Z}_{p1}\bar{I}_1 + \bar{Z}_{p2}\bar{I}_2 + \cdots + \bar{Z}_{pp}(\bar{I}_p - \bar{I}_l) + \cdots + \bar{Z}_{pq}(\bar{I}_q + \bar{I}_\ell) + \cdots + \bar{Z}_{pm}\bar{I}_m \\
&\vdots \\
\bar{V}_q &= \bar{Z}_{q1}\bar{I}_1 + \bar{Z}_{q2}\bar{I}_2 + \cdots + \bar{Z}_{qp}(\bar{I}_p - \bar{I}_l) + \cdots + \bar{Z}_{qq}(\bar{I}_q + \bar{I}_\ell) + \cdots + \bar{Z}_{qm}\bar{I}_m \\
&\vdots \\
\bar{V}_m &= \bar{Z}_{m1}\bar{I}_1 + \bar{Z}_{m2}\bar{I}_2 + \cdots + \bar{Z}_{mp}(\bar{I}_p - \bar{I}_l) + \cdots + \bar{Z}_{mq}(\bar{I}_q + \bar{I}_\ell) + \cdots + \bar{Z}_{mm}\bar{I}_m
\end{aligned}\right\} \tag{4.27}$$

Also from Fig. 4.13, the relation between $\bar{V}_p$ and $\bar{V}_q$ in terms of $\bar{I}_\ell$ and $\bar{z}_{pq}$ can be written as

$$\bar{V}_p - \bar{V}_q = \bar{z}_{pq}\bar{I}_\ell \tag{4.28}$$

or

$$0 \;=\; -\bar{V}_p + \bar{V}_q + \bar{z}_{pq}\bar{I}_\ell \tag{4.29}$$

Substituting $\bar{V}_p$ and $\bar{V}_q$ from the equation (4.27) into the equation (4.29) in the following relation is obtained:

$$\begin{aligned}
0 =&(\bar{Z}_{q1} - \bar{Z}_{p1})\bar{I}_1 + (\bar{Z}_{q2} - \bar{Z}_{p2})\bar{I}_2 + \cdots + (\bar{Z}_{qp} - \bar{Z}_{pp})\bar{I}_p + \cdots(\bar{Z}_{qq} - Z_{pq})\bar{I}_q + \cdots + (\bar{Z}_{qm} - \bar{Z}_{pm})\bar{I}_m \\
&+ (\bar{Z}_{pp} + \bar{Z}_{qq} - 2\bar{Z}_{pq} + \bar{z}_{pq})\bar{I}_\ell
\end{aligned} \tag{4.30}$$

Equations (4.27) and (4.30) form a set of (m + 1) simultaneous equation which can be written in matrix form as:

$$\begin{bmatrix} \bar{V}_1 \\ \bar{V}_2 \\ \vdots \\ \bar{V}_q \\ \vdots \\ \bar{V}_m \\ \cdots \\ 0 \end{bmatrix} = \begin{bmatrix} \bar{Z}_{11} & \bar{Z}_{12} & \cdots & \bar{Z}_{1q} & \cdots & \bar{Z}_{1m} & \vdots & \bar{Z}_{1\ell} \\ \bar{Z}_{21} & \bar{Z}_{22} & \cdots & \bar{Z}_{2q} & \cdots & \bar{Z}_{2m} & \vdots & \bar{Z}_{2\ell} \\ \vdots & & & & & & \vdots & \\ \bar{Z}_{q1} & \bar{Z}_{q2} & \cdots & \bar{Z}_{qq} & \cdots & \bar{Z}_{qm} & \vdots & \bar{Z}_{q\ell} \\ \vdots & & & & & & \vdots & \\ \bar{Z}_{m1} & \bar{Z}_{m2} & \cdots & \bar{Z}_{mq} & \cdots & \bar{Z}_{mm} & \vdots & \bar{Z}_{m\ell} \\ \cdots & \cdots & \cdots & \cdots & \cdots & \cdots & \cdots & \cdots \\ \bar{Z}_{\ell 1} & \bar{Z}_{\ell 2} & \cdots & \bar{Z}_{\ell q} & \cdots & \bar{Z}_{\ell m} & \vdots & \bar{Z}_{\ell\ell} \end{bmatrix} \begin{bmatrix} \bar{I}_1 \\ \bar{I}_2 \\ \vdots \\ \bar{I}_q \\ \vdots \\ \bar{I}_m \\ \cdots \\ \bar{I}_\ell \end{bmatrix} \tag{4.31}$$

Where,

$\bar{Z}_{1\ell} = \bar{Z}_{\ell 1} = (\bar{Z}_{1q} - \bar{Z}_{1p})$; $\bar{Z}_{2\ell} = \bar{Z}_{\ell 2} = (\bar{Z}_{2q} - \bar{Z}_{2p})$

$\bar{Z}_{q\ell} = \bar{Z}_{\ell q} = (\bar{Z}_{qq} - \bar{Z}_{qp})$; $\bar{Z}_{m\ell} = \bar{Z}_{\ell m} = (\bar{Z}_{mq} - \bar{Z}_{mp})$

also

and

$\bar{Z}_{\ell\ell} = \bar{Z}_{qq} + \bar{Z}_{pp} - 2\bar{Z}_{pq} + \bar{z}_{pq}$.

For eliminating the link current $\bar{I}_\ell$ equation (4.31) can be written in the compact form as:

$$\begin{bmatrix} \bar{\mathbf{V}}^{\mathbf{m}}_{\mathbf{Bus}} \\ \hline \mathbf{0} \end{bmatrix} = \begin{array}{c} \\ (\mathbf{m}) \\ (1) \end{array} \begin{array}{c} \begin{array}{cc} (\mathbf{m}) & (1) \end{array} \\ \left[\begin{array}{c|c} \bar{\mathbf{Z}}^{\mathbf{m}}_{\mathbf{Bus}} & [\bar{\mathbf{\Delta}}\mathbf{Z}] \\ \hline [\bar{\mathbf{\Delta}}\mathbf{Z}]^{\mathbf{T}} & \bar{Z}_{\ell\ell} \end{array}\right] \end{array} \begin{bmatrix} \bar{\mathbf{I}}^{\mathbf{m}}_{\mathbf{Bus}} \\ \hline \bar{I}_\ell \end{bmatrix} \tag{4.32}$$

where,

$$[\bar{\mathbf{\Delta}}\mathbf{Z}] = \left[(\bar{Z}_{1q} - \bar{Z}_{1p})\cdots(\bar{Z}_{pq} - \bar{Z}_{pp})\cdots(\bar{Z}_{qq} - \bar{Z}_{qp})\cdots(\bar{Z}_{mq} - \bar{Z}_{mp})\right]^T$$

Now using equation (4.26), the $[\bar{\mathbf{Z}}_{\mathbf{Bus}}]$ matrix, after the elemination of the link current $\bar{I}_\ell$, can be determined. It is worth noting that the $[\bar{\mathbf{Z}}_{\mathbf{Bus}}]$ is still $(m \times m)$ in size as no new node has been created.

Summarizing the step-by-step procedure for building the $[\bar{\mathbf{Z}}_{\mathbf{Bus}}]$ as follows:

Step 1: Draw the graph of the network and select a tree of the graph. Identify the branches and the links of the graph. A tree of a graph with branches and links is shown in Fig. 4.14.

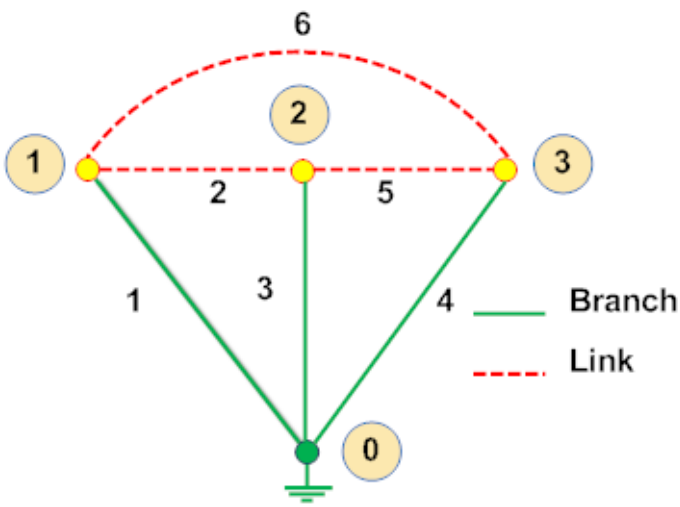

Figure 4.14: Tree of a graph

Step 2: Select a branch connected to the reference node to initiate the $[\bar{\mathbf{Z}}_{\mathbf{Bus}}]$ matrix building process. From Fig. 4.14, it is evident that the first branch selected could be either 1 or 3 or 4 as these are the only branches connected to the reference node. Let the branch 1 be selected as the starting branch and $\bar{z}_{po}$ be the impedance of the branch then

$$\bar{\mathbf{Z}}^{(\mathbf{m})}_{\mathbf{Bus}} = \begin{array}{c} \\ (1) \end{array} \begin{array}{c} (1) \\ \left[\ \bar{z}_{p0}\ \right] \end{array}$$

Step 3: Pick up another element from the graph. It should either be connected to an existing node or the reference node. Never select an element connected to two new nodes as it will be isolated from the existing partial network and this will result in the elements of $[\bar{\mathbf{Z}}_{\mathbf{Bus}}]$ matrix becoming infinite. For instance, with reference to Fig. 4.14, in the next step of $[\bar{\mathbf{Z}}_{\mathbf{Bus}}]$ matrix building process, if

element 5 is next added to the partial network as shown in Fig. 4.15, the resultant network is disjointed. This is an incorrect choice. The proper choice could be any one of the elements 2 or 3 or 4 or 6.

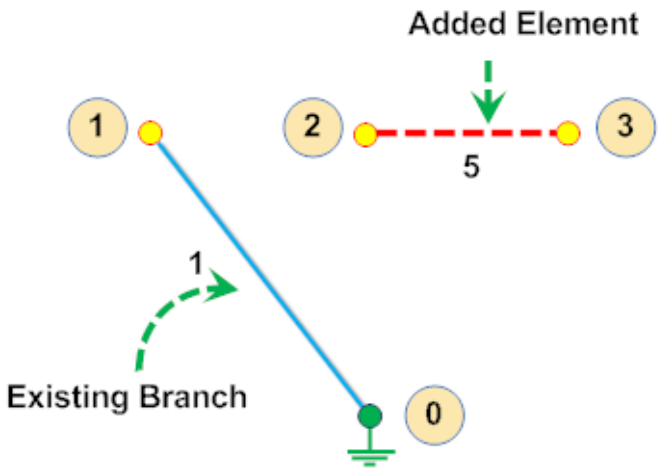

Figure 4.15: Selecting a wrong element in the step-by-step process

If the bus impedance matrix of a partial network with m-nodes, $[\bar{\mathbf{Z}}^{\mathbf{m}}_{\mathbf{Bus}}]$, is known, then depending on whether the added $(m+1)^{th}$ element is a branch or a link, the following steps are to be followed to obtain the new $[\bar{\mathbf{Z}}_{\mathbf{Bus}}]$ matrix:

(a) If the added element is a branch between a new node 'q' and the reference node with an impedance $\bar{z}_{qo}$, then the size of the new $[\bar{\mathbf{Z}}_{\mathbf{Bus}}]$ matrix will increase by one and the new matrix is given as :

$$\bar{\mathbf{Z}}_{\mathbf{Bus}} = \begin{array}{c} \\ (1) \\ \vdots \\ (m) \\ (q) \end{array} \begin{array}{c} \begin{array}{cccc} (1) & (\cdots) & (m) & (q) \end{array} \\ \begin{bmatrix} \bar{Z}_{11} & \cdots & \bar{Z}_{1m} & 0 \\ \vdots & \vdots & \vdots & \vdots \\ \bar{Z}_{m1} & \cdots & \bar{Z}_{mm} & 0 \\ 0 & 0 & 0 & \bar{z}_{q0} \end{bmatrix} \end{array}$$

(b) If the added element is a branch between an existing node 'p' and a new node 'q' with an impedance $\bar{z}_{pq}$, then a new row and column corresponding to the new node 'q' is added to the existing $[\bar{\mathbf{Z}}^{\mathbf{m}}_{\mathbf{Bus}}]$ matrix. The new matrix is calculated as follows:

$$\bar{\mathbf{Z}}_{\mathbf{Bus}} = \begin{array}{c} \\ (1) \\ \vdots \\ (p) \\ \vdots \\ (m) \\ \\ (q) \end{array} \begin{array}{c} \begin{array}{cccccc} (1) & \cdots & (p) & \cdots & (m) & (q) \end{array} \\ \begin{bmatrix} \bar{Z}_{11} & \cdots & \bar{Z}_{1p} & \cdots & \bar{Z}_{1m} & \bar{Z}_{1p} \\ \vdots & & \vdots & & \vdots & \vdots \\ \bar{Z}_{p1} & \cdots & \bar{Z}_{pp} & \cdots & \bar{Z}_{pm} & \bar{Z}_{pp} \\ \vdots & & \vdots & & \vdots & \vdots \\ \bar{Z}_{m1} & \cdots & \bar{Z}_{mp} & \cdots & \bar{Z}_{mm} & \bar{Z}_{mp} \\ \\ \bar{Z}_{p1} & \cdots & \bar{Z}_{pp} & \cdots & \bar{Z}_{pm} & \bar{Z}_{pp} + \bar{z}_{pq} \end{bmatrix} \end{array}$$

(c) If the added element is a link between an existing node 'q' and the reference node with an impedance $\bar{z}_{qo}$, then no new node is added to the network. A two-step procedure has to be followed to find the new bus impedance matrix.

In the first step, a column and a row will be temporarily added to existing $[\bar{\mathbf{Z}}^{\mathbf{m}}_{\mathbf{Bus}}]$ matrix as:

$$\bar{\mathbf{Z}}^{(\mathbf{temp})}_{\mathbf{Bus}} = \begin{array}{c} \\ (1) \\ \vdots \\ (q) \\ \vdots \\ (m) \\ (\ell) \end{array} \begin{array}{c} \begin{array}{cccccc} (1) & \cdots & (q) & \cdots & (m) & (\ell) \end{array} \\ \left[\begin{array}{ccccc|c} \bar{Z}_{11} & \cdots & \bar{Z}_{1q} & \cdots & \bar{Z}_{1m} & -\bar{Z}_{1q} \\ \vdots & & \vdots & & \vdots & \vdots \\ \bar{Z}_{q1} & \cdots & \bar{Z}_{qq} & \cdots & \bar{Z}_{qm} & -\bar{Z}_{qq} \\ \vdots & & \vdots & & \vdots & \vdots \\ \bar{Z}_{m1} & \cdots & \bar{Z}_{mq} & \cdots & \bar{Z}_{mm} & -\bar{Z}_{mq} \\ \hline -\bar{Z}_{q1} & \cdots & -\bar{Z}_{qq} & \cdots & -\bar{Z}_{qm} & \bar{Z}_{\ell\ell} \end{array}\right] \end{array}$$

where,

$$\bar{Z}_{\ell\ell} = \bar{Z}_{qq} + \bar{z}_{q0}$$

The additional row and column have to be deleted so that $[\mathbf{Z}_{\mathbf{Bus}}]$ matrix is $(m \times m)$ in size. The elimination process is carried out using

$$[\bar{\mathbf{Z}}_{\mathbf{Bus}}] = \left[[\bar{\mathbf{Z}}^{\mathbf{m}}_{\mathbf{Bus}}] - \frac{[\mathbf{\Delta}\bar{\mathbf{Z}}][\mathbf{\Delta}\bar{\mathbf{Z}}]^{\mathbf{T}}}{\bar{Z}_{\ell\ell}}] \right]$$

where,

$$[\mathbf{\Delta}\bar{\mathbf{Z}}] = \left[-\bar{Z}_{1q} - \bar{Z}_{2q} \cdots - \bar{Z}_{qq} \cdots - \bar{Z}_{mq} \right]^T$$

(d) If the added element is a link between two existing nodes 'p' and 'q' with an impedance $\bar{z}_{pq}$, then again the two step procedure as outlined in (step c) is to be followed. The temporary impedance matrix $\bar{\mathbf{Z}}^{(\mathbf{temp})}_{\mathbf{Bus}}$ is calculated as:

$$\begin{array}{c} \\ (1) \\ (p) \\ (q) \\ (m) \\ (\ell) \end{array} \begin{array}{c} \begin{array}{cccccc} (1) & (p) & (q) & & (m) & (\ell) \end{array} \\ \left[\begin{array}{ccccc|c} \bar{Z}_{11} & \cdots & \bar{Z}_{1p} & \bar{Z}_{1q} & \cdots & \bar{Z}_{1m} & (\bar{Z}_{1q} - \bar{Z}_{1p}) \\ \vdots & & & & & & \\ \bar{Z}_{p1} & \cdots & \bar{Z}_{pp} & \bar{Z}_{pq} & \cdots & \bar{Z}_{pm} & (\bar{Z}_{pq} - \bar{Z}_{pp}) \\ \vdots & & & & & & \\ \bar{Z}_{q1} & \cdots & \bar{Z}_{qp} & \bar{Z}_{qq} & \cdots & \bar{Z}_{qm} & (\bar{Z}_{qq} - \bar{Z}_{qp}) \\ \vdots & & & & & & \\ \bar{Z}_{m1} & \cdots & \bar{Z}_{mp} & \bar{Z}_{mq} & \cdots & \bar{Z}_{mm} & (\bar{Z}_{mq} - \bar{Z}_{mp}) \\ \hline (\bar{Z}_{q1} - \bar{Z}_{p1}) & \cdots & (\bar{Z}_{qp} - \bar{Z}_{pp}) & (\bar{Z}_{qq} - \bar{Z}_{pq}) & \cdots & (\bar{Z}_{qm} - \bar{Z}_{pm}) & \bar{Z}_{\ell\ell} \end{array}\right] \end{array}$$

where,

$$\bar{Z}_{\ell\ell} = \bar{Z}_{pp} + \bar{Z}_{qq} - 2\bar{Z}_{pq} + \bar{z}_{pq}$$

Next eliminate the added row and column 'ℓ' using the expression:

$$[\bar{\mathbf{Z}}_{\mathbf{Bus}}] = \left[[\bar{\mathbf{Z}}^{\mathbf{m}}_{\mathbf{Bus}}] - \frac{[\mathbf{\Delta}\bar{\mathbf{Z}}][\mathbf{\Delta}\bar{\mathbf{Z}}]^{\mathbf{T}}}{\bar{Z}_{\ell\ell}} \right]$$

where,

$$[\mathbf{\Delta}\bar{\mathbf{Z}}] = \left[(\bar{Z}_{1q} - \bar{Z}_{1p}) \cdots (\bar{Z}_{pq} - \bar{Z}_{pp}) \cdots (\bar{Z}_{qq} - \bar{Z}_{qp}) \cdots (\bar{Z}_{mq} - \bar{Z}_{mp}) \right]^T$$

Step 4: Repeat Step 3 till all the elements are considered.

In the next lecture, we will be looking at an example of $[\mathbf{Z}_{\mathbf{Bus}}]$ matrix building algorithm.

4.2 Example of $[\mathbf{Z}_{\mathbf{Bus}}]$ matrix building algorithm

The single line diagram of a power system is shown in the Fig. 4.16. The line impedances in pu are also given. The step-by-step procedure for $[\bar{\mathbf{Z}}_{\mathbf{Bus}}]$ matrix formulation is explained as given below:

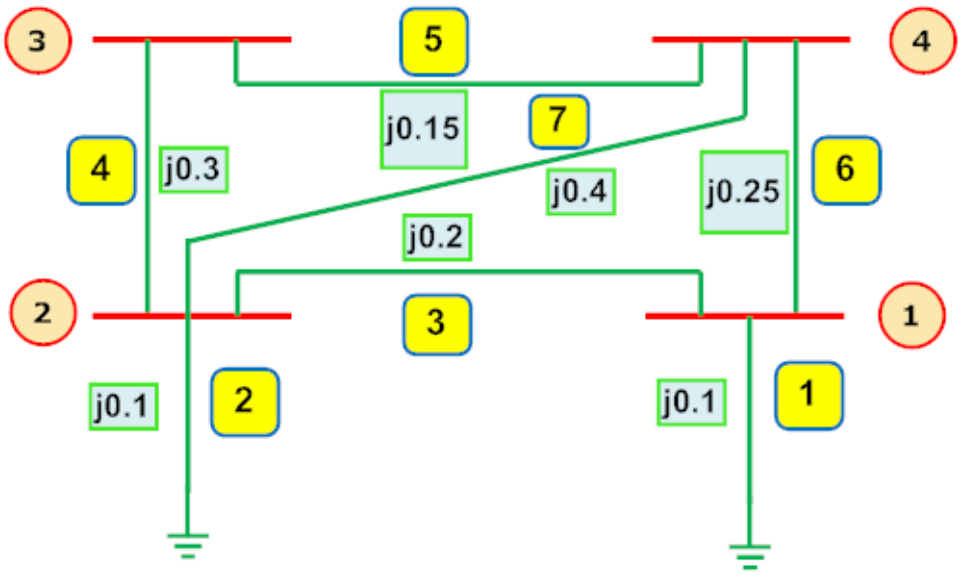

Figure 4.16: Single Line Diagram of the Power System for the example

Preliminary Step: The graph of the network and a tree is shown in Fig. 4.17. Elements **1,2,4** and **5** are the tree branches while **3, 6** and **7** are the links.

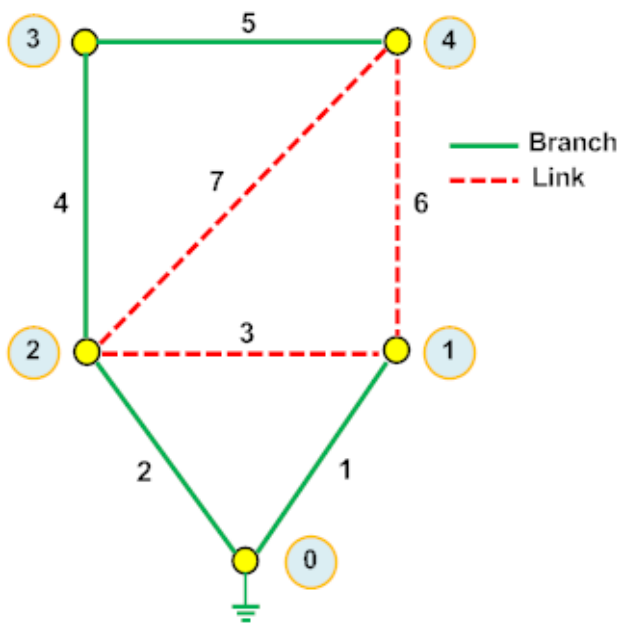

Figure 4.17: Graph and a tree of the network of Fig. 4.17

Step 1: The step-by-step $[\bar{\mathbf{Z}}_{\mathbf{Bus}}]$ matrix building algorithm starts with **element** 1, which is a **tree branch** connected between nodes **1** and the reference node **0** and has an impedance of $\bar{z}_{10} = j0.10$ pu. This is shown in the accompanying figure ,Fig. 4.18.

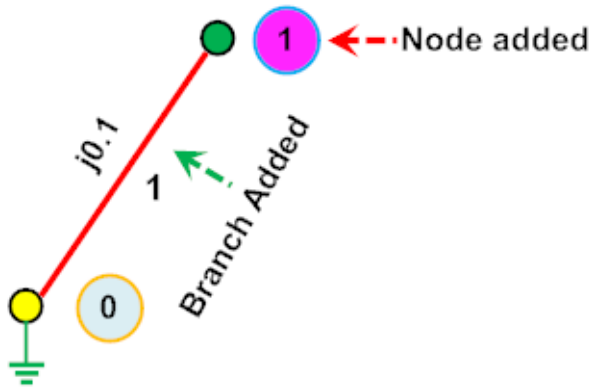

Figure 4.18: Partial network of Step 1

The resulting $[\bar{\mathbf{Z}}_{\mathbf{Bus}}]$ matrix is

$$\bar{\mathbf{Z}}_{\mathbf{Bus}} = \begin{array}{c} \\ (1) \end{array} \begin{array}{c} \begin{array}{c} (1) \end{array} \\ \begin{bmatrix} z_{10} \end{bmatrix} \end{array} = \begin{array}{c} \\ (1) \end{array} \begin{array}{c} \begin{array}{c} (1) \end{array} \\ \begin{bmatrix} j0.10 \end{bmatrix} \end{array}$$

Step 2: Next, the **element 2** connected between **node 2 (q = 2)** and the reference node '**0**' is selected. This element has an impedance of $\bar{z}_{20} = j0.10$ p.u. As this is the addition of a tree branch it will add a new node '**2**' to the existing $[\bar{\mathbf{Z}}_{\mathbf{Bus}}]$ matrix. This addition is illustrated in Fig. 4.19.

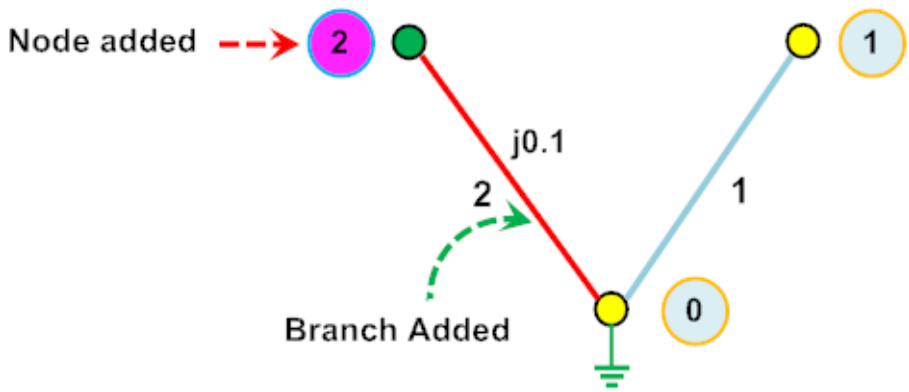

Figure 4.19: Partial network of Step 2

The new bus impedance matrix is given by :

$$\bar{\mathbf{Z}}_{\mathbf{Bus}} = \begin{array}{c} \\ (1) \\ (2) \end{array} \begin{array}{c} \begin{array}{cc} (1) & (2) \end{array} \\ \begin{bmatrix} j0.10 & 0 \\ 0 & z_{20} \end{bmatrix} \end{array} = \begin{array}{c} \\ (1) \\ (2) \end{array} \begin{array}{c} \begin{array}{cc} (1) & (2) \end{array} \\ \begin{bmatrix} j0.1 & 0 \\ 0 & j0.10 \end{bmatrix} \end{array}$$

Step 3: **Element 3** connected between existing nodes, **node 1 (p = 1)** and **node 2 (q = 2)**, having an impedance of $\bar{z}_{12} = j0.20$ p.u. is added to the partial network, as shown in Fig. 4.20.

Since this is an addition of a link to the network a two step procedure is to be followed. In the

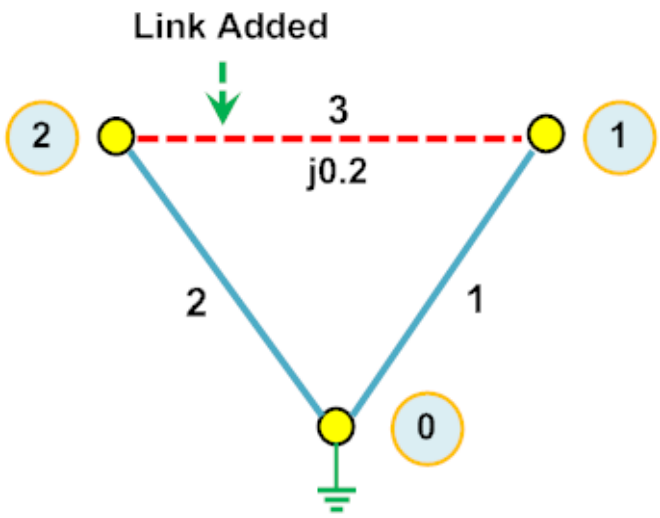

Figure 4.20: Partial network of Step 3

first step a new row and column is added to the matrix as given below :

$$\bar{\mathbf{Z}}_{\mathbf{Bus}}^{(\mathbf{temp})} = \begin{array}{c} \\ (1) \\ (2) \\ (\ell) \end{array} \begin{array}{c} \begin{array}{ccc} (1) & (2) & (\ell) \end{array} \\ \begin{bmatrix} j0.10 & 0.0 & (\bar{Z}_{12} - \bar{Z}_{11}) \\ 0.0 & j0.10 & (\bar{Z}_{22} - \bar{Z}_{21}) \\ (\bar{Z}_{21} - \bar{Z}_{11}) & (\bar{Z}_{22} - \bar{Z}_{12}) & \bar{Z}_{\ell\ell} \end{bmatrix} \end{array} = \begin{array}{c} \\ (1) \\ (2) \\ (\ell) \end{array} \begin{array}{c} \begin{array}{ccc} (1) & (2) & (\ell) \end{array} \\ \begin{bmatrix} j0.10 & 0.0 & \mathbf{-j0.10} \\ 0.0 & j0.10 & \mathbf{j0.10} \\ \mathbf{-j0.10} & \mathbf{j0.10} & \mathbf{j0.40} \end{bmatrix} \end{array}$$

where,

$$\bar{Z}_{\ell\ell} = \bar{Z}_{11} + \bar{Z}_{22} - 2\bar{Z}_{12} + \bar{z}_{20} = j0.10 + j0.10 - 0.0 + j0.20 = j0.40\ p.u.$$

Next this new row and column is eliminated to restore the size of $[\bar{\mathbf{Z}}_{\mathbf{Bus}}]$ matrix as given below:

$$[\bar{\mathbf{Z}}_{\mathbf{Bus}}] = \begin{bmatrix} j0.10 & 0.0 \\ 0.0 & j0.10 \end{bmatrix} - \frac{\begin{bmatrix} -j0.10 \\ j0.10 \end{bmatrix} \begin{bmatrix} -j0.10 & j0.10 \end{bmatrix}}{j0.40}$$

Hence, the impedance matrix after the addition of element 3 is found out to be :

$$\boxed{[\bar{\mathbf{Z}}_{\mathbf{Bus}}] = \begin{array}{c} \\ (1) \\ (2) \end{array} \begin{array}{c} \begin{array}{cc} (1) & (2) \end{array} \\ \begin{bmatrix} \mathbf{j0.075} & \mathbf{j0.025} \\ \mathbf{j0.025} & \mathbf{j0.075} \end{bmatrix} \end{array}}$$

Step 4: The **element 4** , which is added next, is connected between an existing node, **node 2** **(p = 2)** and a new node, **node 3** **(q = 3)**. The impedance of this element is $\bar{z}_{23} = j0.30$ p.u. and it is a tree branch hence, a new node, **node 3** is added to the partial network. This addition, shown in Fig. 4.21, thus increases the size of $[\bar{\mathbf{Z}}_{\mathbf{Bus}}]$ to $(\mathbf{3} \times \mathbf{3})$.

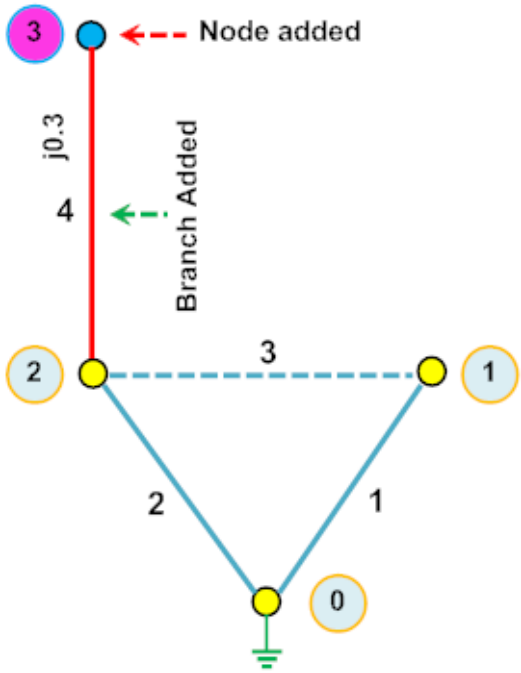

Figure 4.21: Partial network of Step 4

The new impedance matrix can be calculated as:

$$\bar{\mathbf{Z}}_{\mathbf{Bus}} = \begin{array}{c} \\ (1) \\ (2) \\ (3) \end{array} \begin{array}{c} \begin{array}{ccc} (1) & (2) & (3) \end{array} \\ \begin{bmatrix} j0.075 & j0.025 & \bar{Z}_{12} \\ j0.025 & j0.0.075 & \bar{Z}_{22} \\ \bar{Z}_{21} & \bar{Z}_{22} & \bar{Z}_{22} + \bar{z}_{23} \end{bmatrix} \end{array} = \begin{array}{c} \\ (1) \\ (2) \\ (3) \end{array} \begin{array}{c} \begin{array}{ccc} (1) & (2) & (3) \end{array} \\ \begin{bmatrix} j0.075 & j0.025 & \mathbf{j0.025} \\ j0.025 & j0.0.075 & \mathbf{j0.075} \\ \mathbf{j0.025} & \mathbf{j0.075} & \mathbf{j0.375} \end{bmatrix} \end{array}$$

Step 5: **Element 5** is added next to the existing partial network. This is a tree branch connected between an existing node, **node 3** **(p = 3)** and a new node, **node 4** **(q = 4)**. This is illustrated in Fig. 4.22.

Since a new node is added to the partial network, the size of $[\bar{\mathbf{Z}}_{\mathbf{Bus}}]$ increases to $(\mathbf{4} \times \mathbf{4})$. The impedance of the new element is $\bar{z}_{34} = j0.15$ p.u. The new bus impedance matrix is :

$$\bar{\mathbf{Z}}_{\mathbf{Bus}} = \begin{array}{c} \\ (1) \\ (2) \\ (3) \\ (4) \end{array} \begin{array}{c} \begin{array}{cccc} (1) & (2) & (3) & (4) \end{array} \\ \begin{bmatrix} j0.075 & j0.025 & j0.025 & \bar{Z}_{31} \\ j0.025 & j0.075 & j0.075 & \bar{Z}_{32} \\ j0.025 & j0.075 & j0.375 & \bar{Z}_{33} \\ \bar{Z}_{13} & \bar{Z}_{23} & \bar{Z}_{33} & \bar{Z}_{33} + \bar{z}_{34} \end{bmatrix} \end{array} = \begin{array}{c} \\ (1) \\ (2) \\ (3) \\ (4) \end{array} \begin{array}{c} \begin{array}{cccc} (1) & (2) & (3) & (4) \end{array} \\ \begin{bmatrix} j0.075 & j0.025 & j0.025 & \mathbf{j0.025} \\ j0.025 & j0.075 & j0.075 & \mathbf{j0.075} \\ j0.025 & j0.075 & j0.375 & \mathbf{j0.375} \\ \mathbf{j0.025} & \mathbf{j0.075} & \mathbf{j0.375} & \mathbf{j0.525} \end{bmatrix} \end{array}$$

Step 6: Next,the **element 6** connected between two existing nodes **node 1** **(p = 1)** and **node 4** **(q = 4)** is added to the network, as shown in the Fig. 4.23. The impedance of this element is $\bar{z}_{23} = j0.25$ p.u. As this is a link addition, the two step procedure is used. The bus impedance

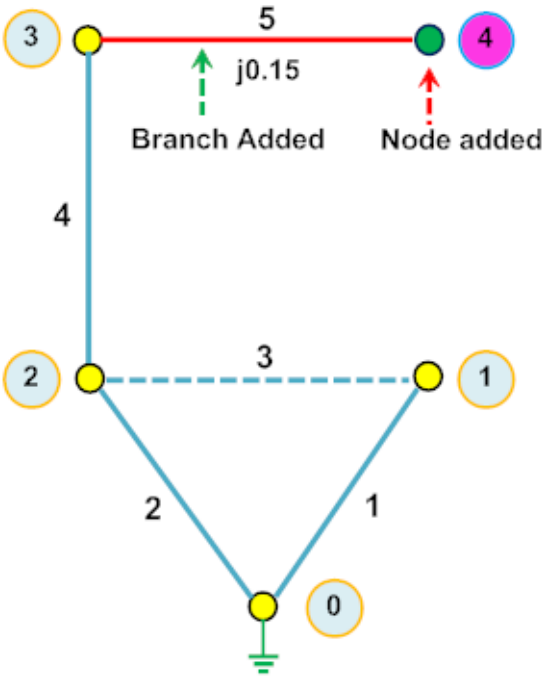

Figure 4.22: Partial network of Step 5

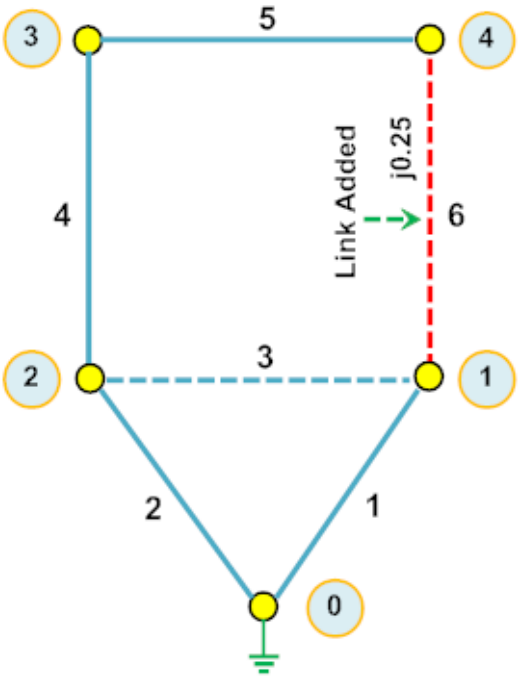

Figure 4.23: Partial network of Step 6

matrix is modified by adding a new row and column as given below:

$$\bar{\mathbf{Z}}_{\mathbf{Bus}}^{(\mathbf{temp})} = \begin{array}{c} \\ (1) \\ (2) \\ (3) \\ (4) \\ (\ell) \end{array} \begin{array}{c} \begin{array}{ccccc} (1) & (2) & (3) & (4) & (\ell) \end{array} \\ \begin{bmatrix} j0.075 & j0.025 & j0.025 & j0.025 & (\bar{Z}_{14} - \bar{Z}_{11}) \\ j0.025 & j0.075 & j0.075 & j0.075 & (\bar{Z}_{24} - \bar{Z}_{21}) \\ j0.025 & j0.075 & j0.375 & j0.375 & (\bar{Z}_{34} - \bar{Z}_{31}) \\ j0.025 & j0.075 & j0.375 & j0.525 & (\bar{Z}_{44} - \bar{Z}_{41}) \\ (\bar{Z}_{41} - \bar{Z}_{11}) & (\bar{Z}_{42} - \bar{Z}_{12}) & (\bar{Z}_{43} - \bar{Z}_{13}) & (\bar{Z}_{44} - \bar{Z}_{14}) & \bar{Z}_{\ell\ell} \end{bmatrix} \end{array}$$

Substituting the values of appropriate $[\bar{\mathbf{Z}}_{\mathbf{Bus}}]$ matrix elements in the last row and column the intermediate impedance matrix is:

$$\bar{\mathbf{Z}}_{\mathbf{Bus}}^{(\mathbf{temp})} = \begin{array}{c} \\ (1) \\ (2) \\ (3) \\ (4) \\ (\ell) \end{array} \begin{array}{c} \begin{array}{ccccc} (1) & (2) & (3) & (4) & (\ell) \end{array} \\ \begin{bmatrix} j0.075 & j0.025 & j0.025 & j0.025 & \mathbf{-j0.05} \\ j0.025 & j0.075 & j0.075 & j0.075 & \mathbf{j0.05} \\ j0.25 & j0.075 & j0.375 & j0.375 & \mathbf{j0.35} \\ j0.025 & j0.075 & j0.375 & j0.525 & \mathbf{j0.50} \\ \mathbf{-j0.05} & \mathbf{0.05} & \mathbf{j0.35} & \mathbf{j0.50} & \mathbf{j0.80} \end{bmatrix} \end{array}$$

where,

$$\bar{Z}_{\ell\ell} = \bar{Z}_{44} + \bar{Z}_{11} - 2\bar{Z}_{14} + \bar{z}_{14} = j0.075 + j0.525 - 2 \times j0.025 + j0.25 = j0.80\ p.u.$$

The additional row and column 'ℓ' are to be eliminated to restore the impedance matrix size to $(\mathbf{m} \times \mathbf{m})$, and the $[\bar{\mathbf{Z}}_{\mathbf{Bus}}]$ matrix after the addition of element 6 is calculated as:

$$[\bar{\mathbf{Z}}_{\mathbf{Bus}}] = \begin{bmatrix} j0.075 & j0.025 & j0.025 & j0.025 \\ j0.025 & j0.075 & j0.075 & j0.075 \\ j0.25 & j0.075 & j0.375 & j0.375 \\ j0.025 & j0.075 & j0.375 & j0.525 \end{bmatrix} - \frac{\begin{bmatrix} -j0.05 \\ j0.50 \\ j0.35 \\ j0.50 \end{bmatrix} \begin{bmatrix} -j0.05 & j0.05 & j0.35 & j0.50 \end{bmatrix}}{j0.80}$$

Hence,

$$\boxed{\bar{\mathbf{Z}}_{\mathbf{Bus}} = \begin{array}{c} \\ (1) \\ (2) \\ (3) \\ (4) \end{array} \begin{array}{c} \begin{array}{cccc} (1) & (2) & (3) & (4) \end{array} \\ \begin{bmatrix} \mathbf{j0.0719} & \mathbf{j0.0281} & \mathbf{j0.0469} & \mathbf{j0.0563} \\ \mathbf{j0.0281} & \mathbf{j0.0719} & \mathbf{j0.0531} & \mathbf{j0.0437} \\ \mathbf{j0.0469} & \mathbf{j0.0531} & \mathbf{j0.2219} & \mathbf{j0.1562} \\ \mathbf{j0.0563} & \mathbf{j0.0437} & \mathbf{j0.1562} & \mathbf{j0.2125} \end{bmatrix} \end{array}}$$

Step 7: Finally the **element 7** connected between two existing nodes **node 2** $(\mathbf{p = 2})$ and **node 4** $(\mathbf{q = 4})$ is added to the partial network of **step 6**. The impedance of this element is is $\bar{z}_{23} = j0.40$ pu. This is also a link addition, as shown in Fig. 4.24 and hence the two step precedure will be followed to obtain the $[\bar{\mathbf{Z}}_{\mathbf{Bus}}]$ matrix. In the first step the $\bar{\mathbf{Z}}_{\mathbf{Bus}}^{(\mathbf{temp})}$ is calculated after a row and a

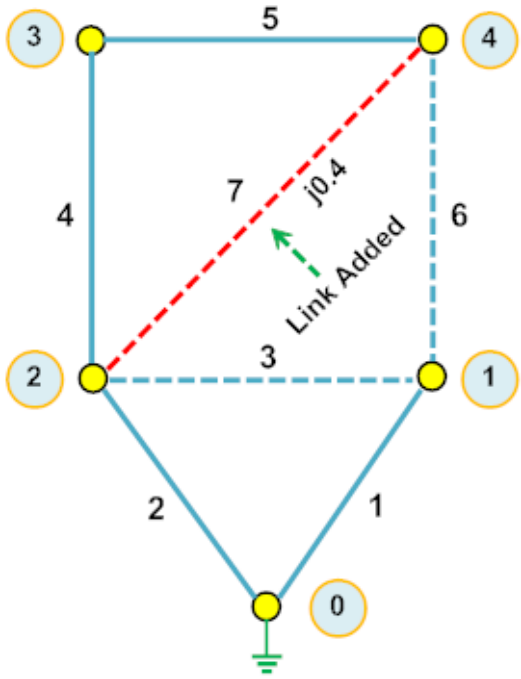

Figure 4.24: Partial network of Step 7

column are added to the exiting $\bar{\mathbf{Z}}_{\mathbf{Bus}}$ as follows:

$$\bar{\mathbf{Z}}_{\mathbf{Bus}}^{(\mathbf{temp})} = \begin{array}{c} \\ (1) \\ (2) \\ (3) \\ (4) \\ (\ell) \end{array} \begin{array}{c} \begin{array}{ccccc} (1) & (2) & (3) & (4) & (\ell) \end{array} \\ \begin{bmatrix} j0.0719 & j0.0281 & j0.0469 & j0.0563 & (\bar{Z}_{14} - \bar{Z}_{12}) \\ j0.0281 & j0.0719 & j0.0531 & j0.0437 & (\bar{Z}_{24} - \bar{Z}_{22}) \\ j0.0469 & j0.0531 & j0.2219 & j0.1562 & (\bar{Z}_{34} - \bar{Z}_{32}) \\ j0.0563 & j0.0437 & j0.1562 & j0.2125 & (\bar{Z}_{44} - \bar{Z}_{42}) \\ (\bar{Z}_{41} - \bar{Z}_{21}) & (\bar{Z}_{42} - \bar{Z}_{22}) & (\bar{Z}_{43} - \bar{Z}_{23}) & (\bar{Z}_{44} - \bar{Z}_{24}) & \bar{Z}_{\ell\ell} \end{bmatrix} \end{array}$$

Substituing the values of the elements of impedance matrix one gets:

$$\bar{\mathbf{Z}}_{\mathbf{Bus}}^{(\mathbf{temp})} = \begin{array}{c} \\ (1) \\ (2) \\ (3) \\ (4) \\ (\ell) \end{array} \begin{array}{c} \begin{array}{ccccc} (1) & (2) & (3) & (4) & (\ell) \end{array} \\ \begin{bmatrix} j0.0719 & j0.0281 & j0.0469 & j0.0563 & \mathbf{j0.281} \\ j0.02810 & j0.0719 & j0.0531 & j0.0437 & \mathbf{-j0.281} \\ j0.0469 & j0.0531 & j0.2219 & j0.1562 & \mathbf{j1031} \\ j0.0563 & j0.0437 & j0.1562 & j0.2125 & \mathbf{j0.1688} \\ \mathbf{j0.281} & \mathbf{-j0.281} & \mathbf{j0.1031} & \mathbf{j0.1688} & \mathbf{j0.5969} \end{bmatrix} \end{array}$$

where,

$$\bar{Z}_{\ell\ell} = \bar{Z}_{22} + \bar{Z}_{44} - 2\bar{Z}_{24} + \bar{z}_{24} = j0.0719 + j0.2125 - 2 \times j0.0563 + j0.40 = j0.5969\ p.u.$$

The additional row and column 'ℓ' are to be eliminated to restore the impedance matrix size to

$(\mathbf{m} \times \mathbf{m})$, and $[\bar{\mathbf{Z}}_{\mathbf{Bus}}]$ after the addition of **element 7** is calculated as:

$$[\bar{\mathbf{Z}}_{\mathbf{Bus}}] = \begin{bmatrix} j0.0719 & j0.0281 & j0.0469 & j0.0563 \\ j0.0281 & j0.0719 & j0.0531 & j0.0437 \\ j0.469 & j0.0531 & j0.2219 & j0.1562 \\ j0.0563 & j0.0437 & j0.1562 & j0.2125 \end{bmatrix} - \frac{\begin{bmatrix} j0.0281 \\ -j0.0281 \\ j0.1031 \\ j0.1688 \end{bmatrix} \begin{bmatrix} j0.0281 & -j0.0281 & j0.1031 & j0.1688 \end{bmatrix}}{j0.5969}$$

Hence,

$$\boxed{\bar{\mathbf{Z}}_{\mathbf{Bus}} = \begin{array}{c} \\ (1) \\ (2) \\ (3) \\ (4) \end{array} \begin{array}{c} \begin{array}{cccc} (1) & (2) & (3) & (4) \end{array} \\ \begin{bmatrix} \mathbf{j0.0705} & \mathbf{j0.0295} & \mathbf{j0.0420} & \mathbf{j0.0483} \\ \mathbf{j0.0295} & \mathbf{j0.0705} & \mathbf{j0.0580} & \mathbf{j0.0517} \\ \mathbf{j0.0420} & \mathbf{j0.0580} & \mathbf{j0.2041} & \mathbf{j0.1271} \\ \mathbf{j0.0483} & \mathbf{j0.0517} & \mathbf{j0.1271} & \mathbf{j0.1648} \end{bmatrix} \end{array}}$$

As can be seen that the final $[\bar{\mathbf{Z}}_{\mathbf{Bus}}]$ matrix is a $(\mathbf{4} \times \mathbf{4})$ matrix, as the network has **4** nodes and a reference node. As there are 7 elements is the network, 7 steps are required for the formation of $[\bar{\mathbf{Z}}_{\mathbf{Bus}}]$ matrix.

4.2.1 Modifications in the existing $[\bar{\mathbf{Z}}_{\mathbf{Bus}}]$:

If in an existing network, for which the $[\bar{\mathbf{Z}}_{\mathbf{Bus}}]$ matrix is known, some modification such as line removal or line impedance alteration is carried out then the $[\bar{\mathbf{Z}}_{\mathbf{Bus}}]$ matrix can be easily modified without any need of reconstructing the matrix from scratch.

As an example, let the $\bar{\mathbf{Z}}_{\mathbf{Bus}}$ matrix be the final bus impedance matrix given for the network of Fig. 4.16. Next, let the **element 7** connecting **nodes 2** and **4** be removed from the network and it is required to find the modified $\bar{\mathbf{Z}}_{\mathbf{Bus}}$.

Removal of **element 7** is equivalent to setting its impedance $\bar{z}_{24}$ to infinite. This can be obtained by connecting a fictitious element $\bar{z}_{24}^{add}$ in parallel to the existing element $\bar{z}_{24}^{org}$ such that the resultant impedance $\bar{z}_{24}^{result}$ is infinite i.e.

$$\frac{1}{\bar{z}_{24}^{result}} = \frac{1}{\bar{z}_{24}^{org}} + \frac{1}{\bar{z}_{24}^{add}} = \frac{1}{\infty} = 0$$

or

$$\bar{z}_{24}^{add} = -\bar{z}_{24}^{org} = -j0.40\ p.u.$$

Hence, by adding an element $\bar{z}_{24}^{add} = -j0.4\ p.u.$ in parallel to $\bar{z}_{24}^{org}$ the removal of line between **nodes 2** and **4** can be simulated. The new added fictitious element is a link addition between the two nodes, $\mathrm{p} = 2$ and $\mathrm{q} = 4$ and is shown in Fig. 4.25 . Hence, this will require a two-step procedure. The addition of the **fictitious element 8** , which is a link, will introduce a temporary row and column.

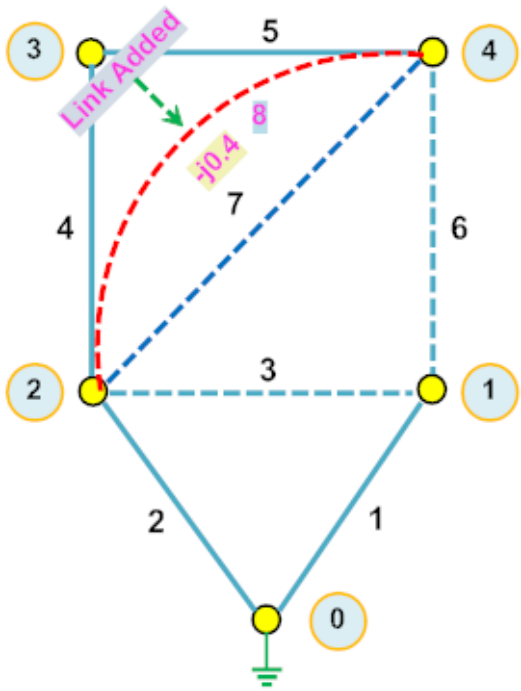

Figure 4.25: Adding a link to simulate the removal of **element 7**

The $\bar{\mathbf{Z}}_{\mathbf{Bus}}^{(\mathbf{temp})}$ is given as:

$$\bar{\mathbf{Z}}_{\mathbf{Bus}}^{(\mathbf{temp})} = \begin{array}{c} \\ (1) \\ (2) \\ (3) \\ (4) \\ (\ell) \end{array} \begin{array}{c} \begin{array}{ccccc} (1) & (2) & (3) & (4) & (\ell) \end{array} \\ \begin{bmatrix} j0.0705 & j0.0295 & j0.0420 & j0.0483 & (\bar{Z}_{14} - \bar{Z}_{12}) \\ j0.0295 & j0.0705 & j0.0580 & j0.0517 & (\bar{Z}_{24} - \bar{Z}_{22}) \\ j0.0420 & j0.0580 & j0.2041 & j0.1271 & (\bar{Z}_{34} - \bar{Z}_{32}) \\ j0.0483 & j0.0517 & j0.1271 & j0.1648 & (\bar{Z}_{44} - \bar{Z}_{42}) \\ (\bar{Z}_{41} - \bar{Z}_{21}) & (\bar{Z}_{42} - \bar{Z}_{22}) & (\bar{Z}_{43} - \bar{Z}_{23}) & (\bar{Z}_{44} - \bar{Z}_{24}) & \bar{Z}_{\ell\ell} \end{bmatrix} \end{array}$$

Substituting the appropriate values one gets:

$$\bar{\mathbf{Z}}_{\mathbf{Bus}}^{(\mathbf{temp})} = \begin{array}{c} \\ (1) \\ (2) \\ (3) \\ (4) \\ (\ell) \end{array} \begin{array}{c} \begin{array}{ccccc} (1) & (2) & (3) & (4) & (\ell) \end{array} \\ \begin{bmatrix} j0.0705 & j0.0295 & j0.0420 & j0.0483 & \mathbf{j0.0188} \\ j0.0295 & j0.0705 & j0.0580 & j0.0517 & \mathbf{-j0.0188} \\ j0.0420 & j0.0580 & j0.2041 & j0.1271 & \mathbf{j0.0691} \\ j0.0483 & j0.0517 & j0.1271 & j0.1648 & \mathbf{j0.1131} \\ \mathbf{j0.0188} & \mathbf{-j0.0188} & \mathbf{j0.0691} & \mathbf{j0.1131} & \mathbf{-j0.2681} \end{bmatrix} \end{array}$$

where,

$$\bar{Z}_{\ell\ell} = \bar{Z}_{22} + \bar{Z}_{44} - 2\bar{Z}_{24} + \bar{z}_{24}^{add} = j0.0705 + j0.1648 - 2 \times j0.0483 + (-j0.40) = -j0.2681\ p.u.$$

The additional row and column is eliminated in the following step:

$$[\bar{\mathbf{Z}}_{\mathbf{Bus}}] = \begin{bmatrix} j0.0705 & j0.0295 & j0.0420 & j0.0483 \\ j0.0295 & j0.0705 & j0.0580 & j0.0517 \\ j0.0420 & j0.0580 & j0.2041 & j0.1271 \\ j0.0483 & j0.0517 & j0.1271 & j0.1648 \end{bmatrix} - \frac{\begin{bmatrix} j0.0188 \\ -j0.0188 \\ j0.0691 \\ j0.1131 \end{bmatrix} \begin{bmatrix} j0.0188 & -j0.0188 & j0.0691 & j0.1131 \end{bmatrix}}{-j0.2681}$$

Thus, the final impedance matrix after the removal of **element 7** is :

$$\boxed{\bar{\mathbf{Z}}_{\mathbf{Bus}} = \begin{array}{c} \\ (1) \\ (2) \\ (3) \\ (4) \end{array} \begin{array}{c} \begin{array}{cccc} (1) & (2) & (3) & (4) \end{array} \\ \begin{bmatrix} \mathbf{j0.0719} & \mathbf{j0.0281} & \mathbf{j0.0469} & \mathbf{j0.0563} \\ \mathbf{j0.0281} & \mathbf{j0.0719} & \mathbf{j0.0531} & \mathbf{j0.0437} \\ \mathbf{j0.0469} & \mathbf{j0.0531} & \mathbf{j0.2219} & \mathbf{j0.1562} \\ \mathbf{j0.0563} & \mathbf{j0.0437} & \mathbf{j0.1562} & \mathbf{j0.2125} \end{bmatrix} \end{array}}$$

The obtained $\bar{\mathbf{Z}}_{\mathbf{Bus}}$ matrix is identical to the $\bar{\mathbf{Z}}_{\mathbf{Bus}}$ matrix obtained in **step 6** of the previous example, which is the impdance matrix of the network before the addition of **element 7**.

So far we have considered the $\bar{\mathbf{Z}}_{\mathbf{Bus}}$ matrix building algorithm without any presence of mutually coupled elements. In the next lecture, we will take into account the presence of mutually coupled elements while forming the $\bar{\mathbf{Z}}_{\mathbf{Bus}}$ matrix.

Computer Aided Power System Analysis - Web course

NP-TEL

NPTEL

http://nptel.ac.in

Module 4: Short Circuit analysis

Electrical Engineering