Transitions and Erosion Protection

R. B. YOUNG

A. TRANSITIONS

1. General

7-1. ***Purpose and Description.***—Transitions usually produce gradual changes in water prism cross sections and are used at structure inlets and outlets and at changes in canal sections to: (1) provide smoother water flow, (2) reduce energy loss, (3) minimize canal erosion, (4) reduce ponded water surface elevations at cross-drainage structures, (5) provide additional stability to adjacent structures because of the added resistance to percolation, and (6) to retain earthfill at the ends of structures.

Transitions usually produce gradually accelerating velocities in inlet transitions and gradually decelerating velocities in outlet transitions. Because of the improved flow conditions at the ends of a pipe structure, the allowable pipe velocity may be increased and the size of pipe may be decreased if sufficient head is available.

Transitions are either open (no top) or closed. Closed transitions are used to further reduce energy losses for pipe structures by providing an additional gradual change of water prism cross section from rectangular to round. The refinement of rectangular to round transitions is usually not justified for capacities discussed in this publication. Open transitions may be either concrete or earth. Earth transitions are used to transition base width, invert elevation, and side slopes from a canal structure or concrete transition to that of the waterway section.

7-2. ***Types.***—(a) *Inline Canal Structure Transitions.*—The most common concrete transitions for inline canal structures are: (1) streamlined warp, (2) straight warp, and (3) broken-back. Broken-back refers to the intersection of the vertical and sloping plane surfaces on the sides of the transition as shown on figures 1-12, 2-6, 7-1, and 7-2 and is sometimes also referred to as dogleg. Broken-back transitions used with structures other than pipe structures (fig. 2-19) are discussed in other chapters. However, criteria in this chapter for water surface angles, cutoff dimensions, and freeboard at the cutoff are applicable. The streamlined and straight warp transitions will not be discussed because their refinement is usually not justified for the capacity range in this publication.

Figure 7-1. **Type 1 concrete transition. P33-D-25693**

[1]Civil Engineer, Hydraulic Structures Branch, Bureau of Reclamation.

A type 5 transition (fig. 7-3) is sometimes used to transition from a concrete-lined canal to a pipe structure. The transition energy head loss will be greater with this transition than with a more streamlined transition.

(b) *Cross-drainage Pipe Structure Transitions.*—The most common concrete transitions used with cross-drainage structures are type 1 (broken-back), figure 7-2; type 2, figures 7-4 and 4-19; type 3, figures 7-5 and 4-22; and type 4, figures 7-6 and 7-7. Addition of an inlet transition to a cross-drainage pipe structure permits the pipe inlet to be lowered which results in lowering of the required upstream water surface (provided the control is upstream). Lower upstream water surface minimizes inundation of farmland and increases the canal embankment freeboard.

A type 1 transition is used if the natural drainage channel has a well-defined cross section with dimensions that can reasonably be transitioned to the broken-back cross section. Where the uphill canal bank obstructs storm runoff from a relatively wide or lesser defined drainage channel, a type 2, 3, or 4 transition is usually more suitable. See chapter IV for further discussion of cross-drainage structures.

2. *Design Considerations for Pipe Structure Transitions*

7-3. ***Hydraulic Design.***—(a) *Pipe Submergence.*—Inlet transitions to pipe structures where the hydraulic control is at the downstream end of the structure should have a seal of 1.5 times the difference of velocity heads in the pipe and canal ($1.5\ \Delta h_v$) or 3 inches minimum. The seal is measured between the upstream water surface of the inlet transition and the top of the opening in the transition headwall. This inlet submergence allows for a pipe entrance loss and a conversion of static head in the canal to full-pipe velocity head. For minimum head loss, the top of the opening at the outlet transition headwall should have little or no submergence. If the submergence exceeds one-sixth of the depth of the opening at the outlet, the head loss should be computed on the basis of a sudden enlargement rather than as an outlet transition. Theoretical differences in water surface in the canal and immediately inside the conduit at the headwalls are: $\Delta WS = (1+K_1)\ \Delta h_v$ at the inlet, and $\Delta WS = (1-K_2)\ \Delta h_v$ at the outlet. These values omit the small transition friction losses, and K_1 and K_2 are transition head loss coefficients described in the following paragraphs.

Where an inlet transition connects to a free-flow closed conduit in such a way that the conduit inlet is sealed, the head required to discharge the design flow can be determined by the orifice equation [1],[2] $Q = CA\sqrt{2gh}$ = discharge coefficient x pipe area x $\sqrt{2 \times g \times \text{head}}$. The head is measured from the center of the headwall opening to the inlet water surface, and a discharge coefficient of $C = 0.6$ should be used.

(b) *Head Losses.*—The energy head loss in a concrete transition will depend primarily on the difference between the velocity heads (Δh_v) at the cutoff end of the transition (usually taken to be the canal velocity head) and at the normal to centerline section of the closed conduit at the headwall. Friction losses for short transitions associated with capacities up to 100 cfs will be small and are usually omitted. Coefficients used with Δh_v which are considered adequate for determining energy losses in broken-back transitions are $K_1 = 0.4$ for the inlet and $K_2 = 0.7$ for the outlet or inlet loss = $0.4\ \Delta h_v$, and outlet loss = $0.7\ \Delta h_v$. Dimensions for broken-back transitions are usually such that additional transitioning to the canal section must be made with an earth transition where the canal is earth and a lined transition where the canal is lined. However, energy losses attributed to these transitions are small, and it is usually considered adequate in the hydraulic design to use only the concrete transition losses with the assumption that the velocity at the transition cutoff is the same as the velocity in the canal.

Coefficients of Δh_v considered adequate for determining energy losses for earth transitions connecting a canal section to a pipe are $K_1 = 0.5$ for the inlet and $K_2 = 1.0$ for the outlet.

---

[2] Numbers in brackets refer to items in the bibliography, see sec 7-16.

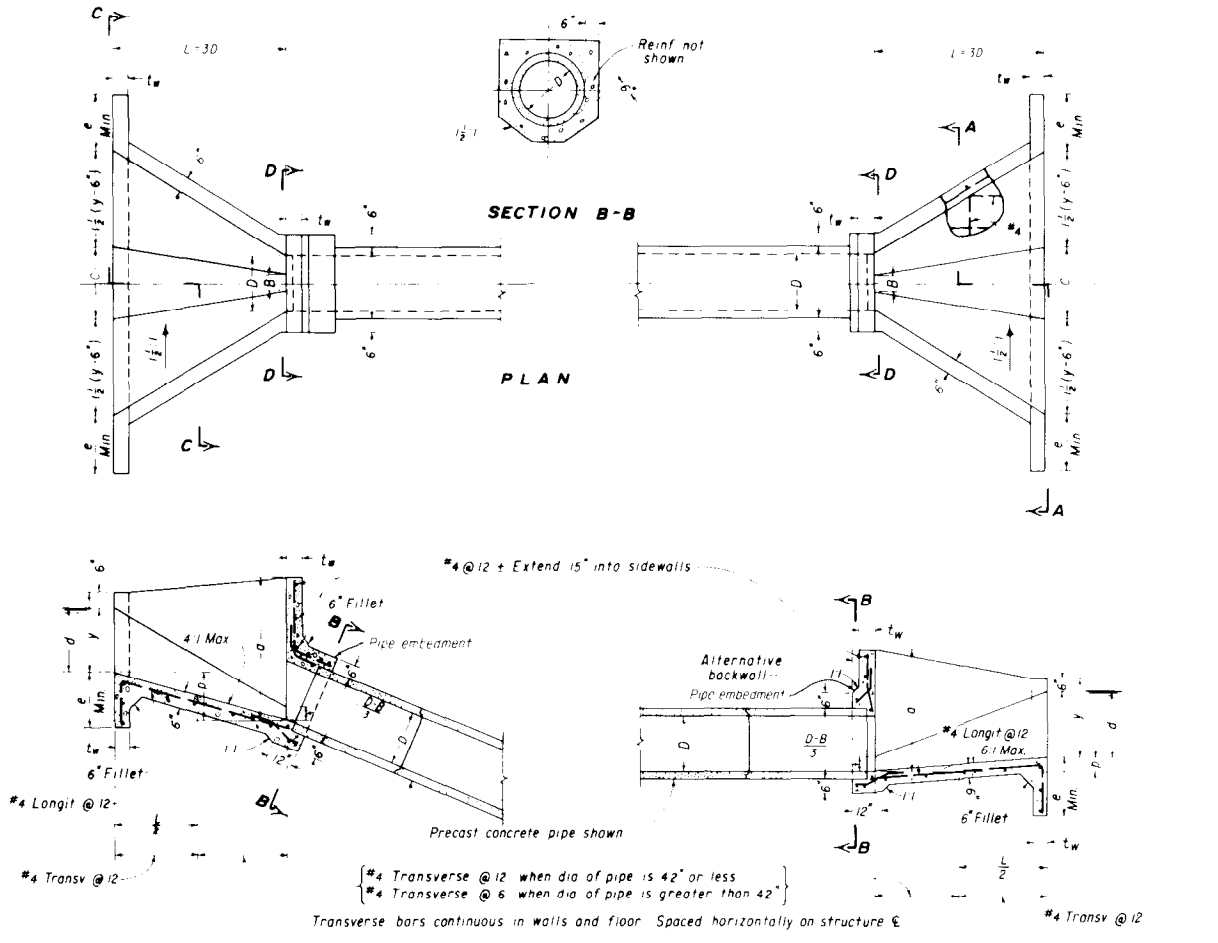

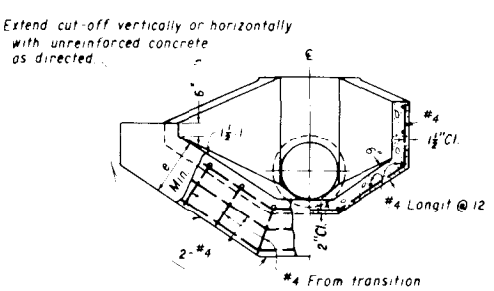

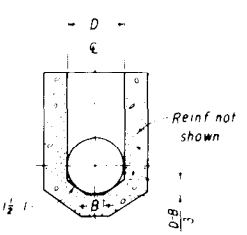

DIMENSIONS e AND t_w

DEPTH (d) OF WATER IN CANAL	e	t_w
0 to 3'	24"	6"
3' to 6'	2'-6"	8"
Greater than 6'	3'-0"	8"

DIMENSION C

RELATIONSHIP OF PIPE DIAMETER (D) TO DEPTH (d) IN CANAL	C WITH WATER SURFACE ANGLE OF 22 ½°	C WITH WATER SURFACE ANGLE OF 25°	C WITH WATER SURFACE ANGLE OF 27 ½°
D = d	.5D	.8D	1.1D
D = 1.25d	1.1D	1.4D	1.7D
D = 1.5d	1.5D	1.8D	2.1D
D = 2d	2.0D	2.3D	2.6D

NOTES

The minimum freeboard at the transition cutoff of structures in earth lined or unlined canals should be 6 inches for depths of water at the cutoff of 0 to 1.25 feet, 9 inches for depths 1.26 to 2.00 feet, and 12 inches for depths 2.00 to 5.00 feet.

The freeboard at the transition cutoff of structures in hard surface lined canals should be the same as the freeboard of the lining.

The freeboard at transition headwalls should be equal to or greater than the freeboard at the cutoff for 24 inch pipe and smaller and the freeboard should increase as the size of the structure increases.

B = 303D

y = Depth (d) at cutoff plus freeboard at cutoff.

The elevation of the invert at the headwall is determined from the required submergence at the headwall opening.

Figure 7-2. **Concrete transitions–type 1. 103-D-1288**

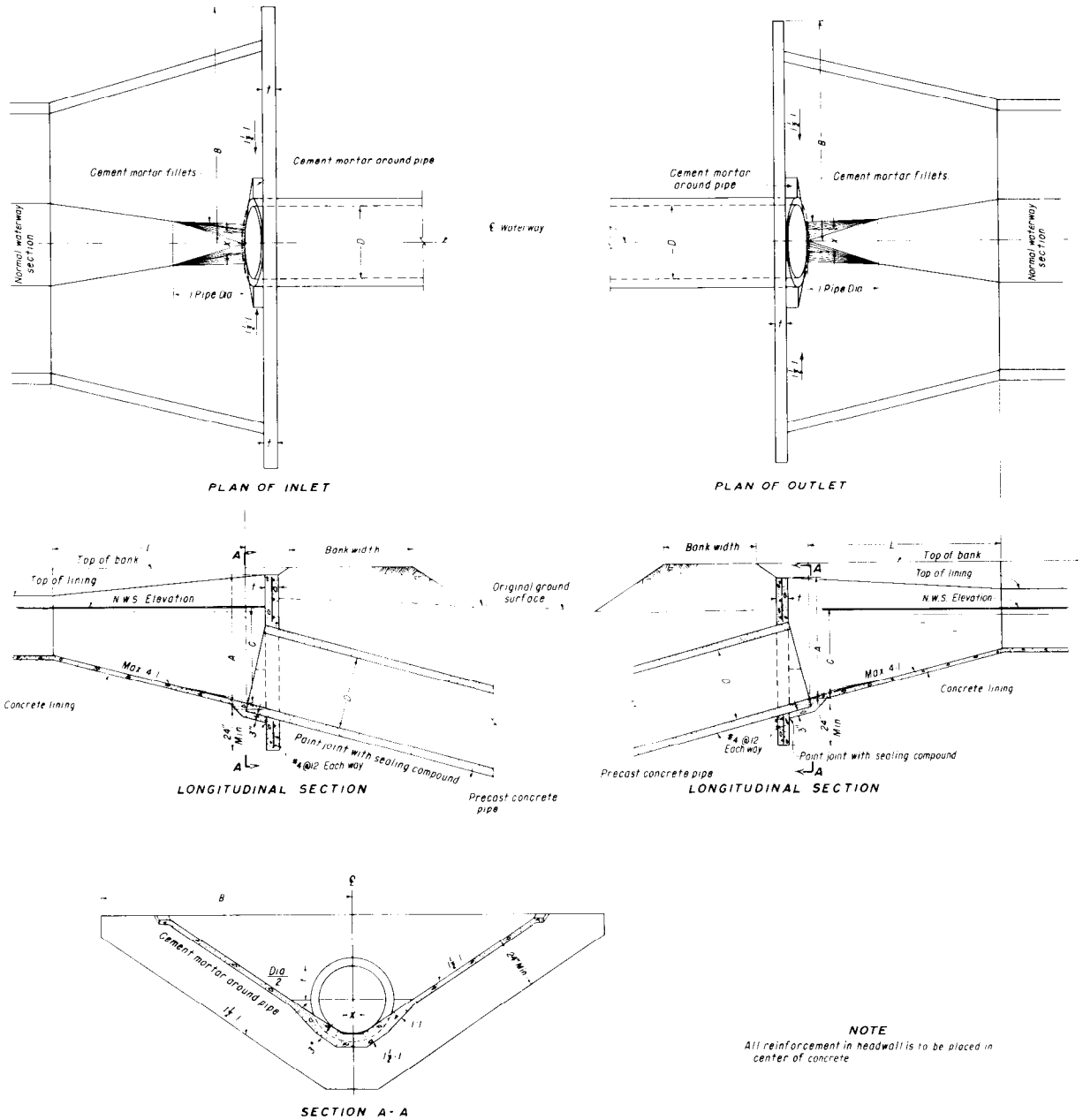

NOTE
All reinforcement in headwall is to be placed in center of concrete

				INLET HEADWALL					OUTLET HEADWALL				
DIA	L	t	X	C	A	B	CONCRETE (CU YD)	REINF STEEL (LB)	C	A	B	CONCRETE (CU YD)	REINF STEEL (LB)
12"	5'-0"	6"	4"	2.00'	3'-7"	7'-6"	1.0	70	1.30'	2'-9"	6'-4"	7	50
15"	5'-0"	5"	5"	2.25'	3'-10"	8'-0"	1.1	75	1.60'	3'-2"	6'-11"	.9	60
18"	5'-0"	6"	6"	2.50'	4'-1"	8'-5"	1.2	85	2.00'	3'-6"	7'-6"	1.0	70
21"	5'-3"	6"	7"	2.75'	4'-4"	8'-10"	1.2	90	2.30'	3'-10"	8'-0"	1.1	80
24"	6'-0"	6"	7"	3.00'	4'-8"	9'-3"	1.3	95	2.70'	4'-3"	8'-7"	1.2	85
27"	6'-9"	7"	8"	3.25'	4'-11"	9'-9"	1.7	105	3.00'	4'-7"	9'-2"	1.5	95
30"	7'-6"	7"	9"	3.50'	5'-2"	10'-1"	1.8	110	3.30'	4'-11"	9'-9"	1.7	105
36"	9'-0"	7"	11"	4.00'	5'-8"	10'-11"	2.0	125	4.00'	5'-8"	10'-11"	2.0	125

The tabulated dimensions are for a full pipe velocity of 5 fps

Figure 7-3. **Concrete transitions–type 5. 103-D-1289**

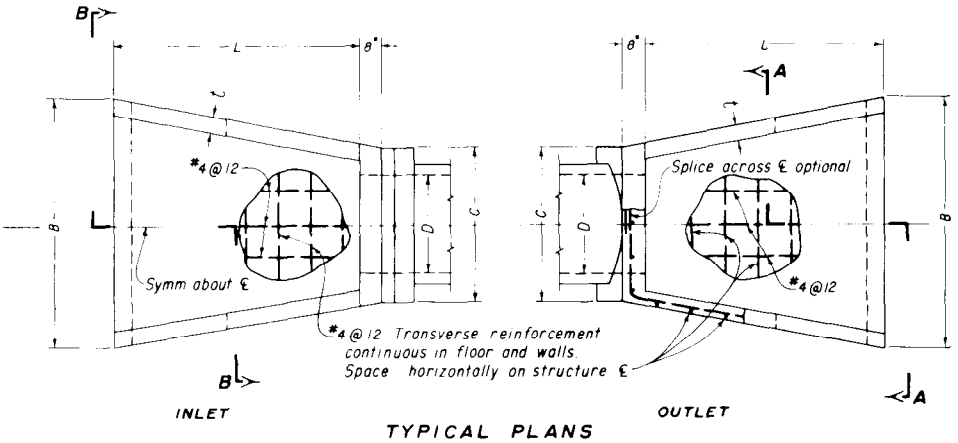

TYPICAL PLANS

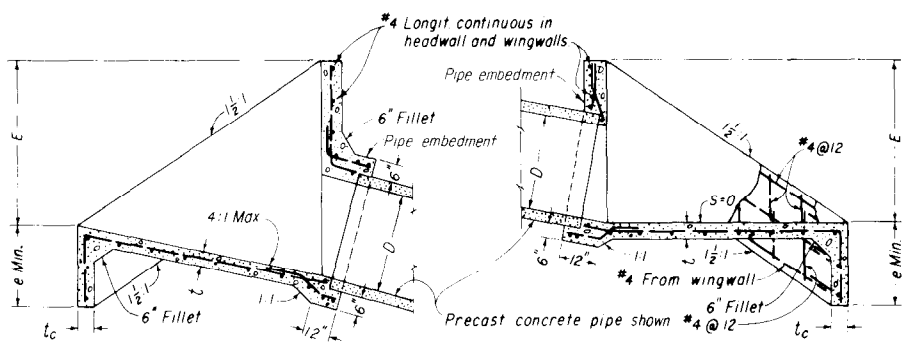

LONGITUDINAL SECTIONS

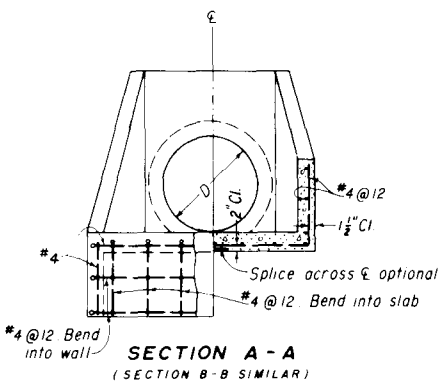

SECTION A - A
(SECTION B-B SIMILAR)

TABLE OF DIMENSIONS AND EST. QUANTITIES

D	E	e	L	B	C	t	t_c	CONC. (CU. YDS.)	REINF. (LBS.)
24"	4'-0"	24"	6'-0"	5'-6"	3'-6"	5"	6"	1.7	140
27"	4'-6"	24"	6'-9"	5'-6"	3'-9"	5"	6"	2.0	160
30"	4'-6"	24"	6'-9"	6'-6"	4'-2"	5"	6"	2.2	180
33"	5'-0"	2'-6"	7'-6"	7'-6"	4'-4"	5"	8"	2.4	200
36"	5'-0"	2'-6"	7'-6"	7'-6"	4'-8"	5"	8"	2.7	220
39"	5'-6"	2'-6"	8'-3"	9'-0"	5'-0"	6"	8"	3.5	280
42"	5'-6"	2'-6"	8'-3"	9'-0"	5'-3"	6"	8"	3.6	290
45"	6'-0"	2'-6"	9'-0"	10'-6"	5'-6"	7"	8"	4.7	370
48"	6'-0"	2'-6"	9'-0"	10'-6"	6'-0"	7"	8"	4.8	380

Figure 7-4. Concrete transitions–type 2. 103-D-1290

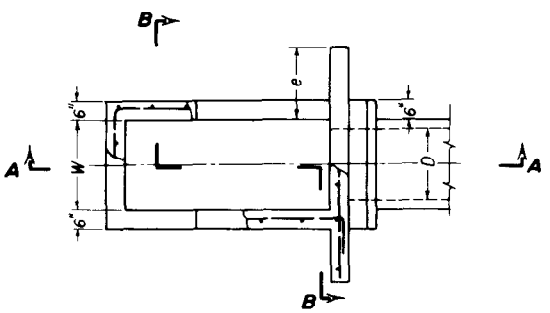

PLAN

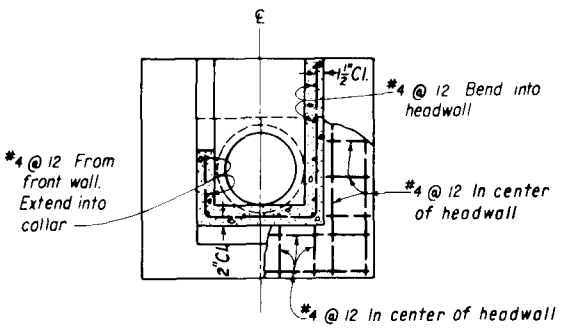

SECTION B-B

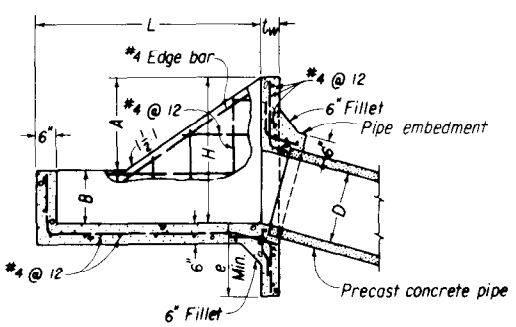

SECTION A-A

STR. No.	MAX. Q	DIMENSIONS								EST. QUANTITIES	
		D	L	W	H	A	B	t_w	e	CONCRETE CUBIC YDS.	REINF. STEEL LBS.
24-1	16	24"	6'-0"	2'-6"	4'-0"	2'-6"	18"	6"	24"	1.8	140
24-2	21	24"	6'-0"	2'-6"	4'-6"	2'-6"	24"	6"	24"	2.0	160
24-3	26	24"	6'-0"	2'-6"	5'-0"	2'-6"	2'-6"	6"	24"	2.2	180
24-4	31	24"	6'-0"	2'-6"	5'-8"	2'-6"	3'-2"	6"	24"	2.4	200
27-1	35	27"	6'-9"	2'-9"	5'-6"	2'-6"	3'-0"	6"	24"	2.6	210
27-2	40	27"	6'-9"	2'-9"	6'-0"	2'-6"	3'-6"	6"	24"	2.8	220
30-1	45	30"	7'-6"	3'-3"	6'-0"	3'-0"	3'-0"	6"	24"	3.0	240
30-2	50	30"	7'-6"	3'-3"	6'-6"	3'-0"	3'-6"	6"	24"	3.2	260
33-1	55	33"	9'-0"	3'-9"	6'-0"	3'-0"	3'-0"	8"	2'-6"	4.3	290
33-2	60	33"	9'-0"	3'-9"	6'-6"	3'-0"	3'-6"	8"	2'-6"	4.6	320
36-1	70	36"	9'-0"	3'-9"	7'-0"	3'-0"	4'-0"	8"	2'-6"	5.0	340

Tabulated dimensions and maximum Q's, provide freeboard at the headwall, with full-pipe velocities ranging up to 10 fps.

Figure 7-5. Concrete inlet transitions–type 3. 103-D-1291

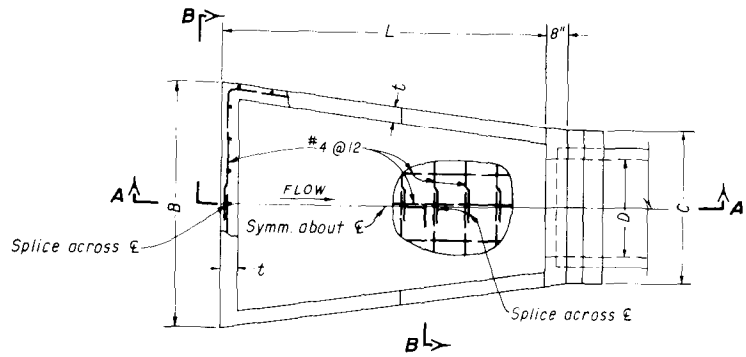

PLAN

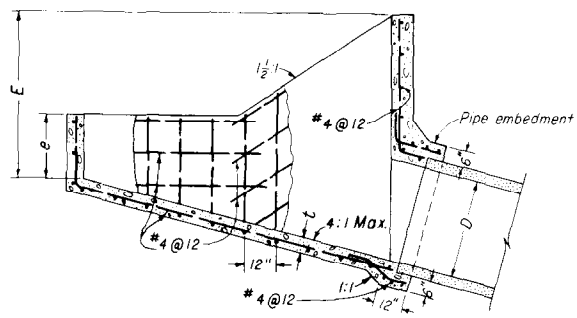

SECTION A-A

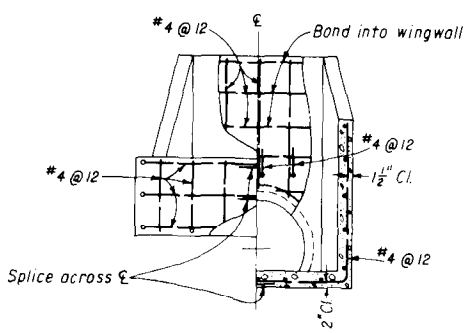

SECTION B-B

TABLE OF DIMENSIONS AND QUANTITIES

DIA.	E	e	L	B	C	t	CONC. (CU.YDS.)	REINF. (LBS.)
24"	4'-0"	24"	8'-0"	5'-0"	3'-6"	5"	1.7	120
30"	4'-6"	24"	9'-0"	6'-6"	4'-2"	5"	2.2	150
36"	5'-0"	24"	10'-0"	7'-6"	4'-8"	5"	2.7	190
42"	5'-6"	2'-6"	11'-0"	9'-0"	5'-3"	6"	4.0	280
48"	6'-0"	2'-6"	12'-0"	10'-6"	6'-0"	7"	4.8	340
54"	6'-6"	2'-6"	13'-0"	12'-0"	6'-7"	7"	5.6	390
60"	7'-0"	2'-6"	14'-0"	13'-6"	7'-2"	7"	6.5	460

Tabulated dimensions provide for control at the headwall with a full pipe velocity of 12 fps

Figure 7-6. **Concrete inlet transitions–type 4. 103-D-1292**

Figure 7-7. **Type 4 inlet concrete transition. P-328-701-9300**

(c) *Water Surface Angle.*—To obtain the most desirable hydraulic conditions, the angle between the water surface and the transition centerline should not exceed 27-1/2° for inlet transitions and 22-1/2° for outlet transitions. For some structure designs it may be economical to use an angle of 25° to allow the same concrete transition to be used for both inlet and outlet. For this angle the loss coefficients remain 0.5 for the inlet and 1.0 for the outlet.

(d) *Channel Erosion.*—To prevent undue channel erosion downstream from a structure outlet, the following criteria for pipe velocity should be observed. If the pipe velocity is equal to or less than 3.5 feet per second, an earth outlet transition is usually sufficient. If the pipe velocity is greater than 3.5 feet per second a concrete outlet transition or other outlet structure is required. If the pipe velocity is greater than 10 feet per second a baffled outlet or a stilling pool should be used.

7-4. ***Cutoffs.***—Cutoffs are provided to reduce percolation around transitions and to add stability and structural strength to transitions. Cutoffs are required at the ends of transitions in concrete-lined canals as well as in other lined or earth canals.

Cutoff walls should, in general, be a minimum of 24 inches deep for water depths up to 3 feet at the cutoff; 2 feet 6 inches deep for water depths of 3 to 6 feet; and 3 feet for water depths greater than 6 feet. For some small structures, 18-inch cutoffs may be satisfactory. The minimum concrete thickness should be 6 inches for 18- and 24-inch cutoffs and 8 inches for cutoffs deeper than 24 inches. Excavation for the structure may disclose soils that are unusually susceptible to piping, in which case the cutoff should be extended vertically or horizontally, or both, beyond these minimums to provide adequate protection against percolation. Nonreinforced concrete may be used for the extension.

7-5. ***Standardization.***—Concrete transitions may be standardized as a means of reducing cost by designing them to fit a range of conditions thereby rendering them applicable for a number of transition installations. If concrete transitions are standardized for inline canal structures it will probably be necessary to supplement the concrete transitions with earth or concrete lining transitions to complete the transitioning to the canal section. Transition losses for these supplemental transitions are usually neglected.

7-6. ***Type 1 Transitions (Broken-back).***—Figure 7-2 shows a typical type 1 transition. The type 1 transition is generally used with inline structures because of its applicability to a well-defined channel cross section.

A transition length L equal to three times the pipe diameter has given satisfactory performance in providing the necessary distance for smoothly changing the water velocity.

Dimension B is chosen so that the 1-1/2 to 1 sloping walls are approximately tangent to the opening at the headwall, and may be determined using the relationship, B = 0.303 times the pipe diameter. The computed value is rounded to the nearest greater inch.

The base width C at the cutoff walls is dependent on the design refinement of the water surface angle. If y – 6 inches is assumed to be approximately the same as the depth d in the canal at the cutoff, an acceptable C value can be determined by using the following water surface angles, equations, and relationships for pipe diameter D to depth d:

For a water surface angle of 22-1/2°:

C = 0.5D when D = d,
C = 1.1D when D = 1.25d,
C = 1.5D when D = 1.5d, and
C = 2D when D = 2d

For a water surface angle of 25°:

C = 0.8D when D = d,
C = 1.4D when D = 1.25d,
C = 1.8D when D = 1.5d, and
C = 2.3D when D = 2d

For a water surface angle of 27-1/2°:

C = 1.1D when D = d,
C = 1.7D when D = 1.25d,
C = 2.1D when D = 1.5d, and
C = 2.6D when D = 2d

Additional transitioning to the canal base width, if required, can be accomplished with an earth or concrete-lined transition.

Dimension y should not be less than the sum of the water depth at the cutoff and design freeboard at the cutoff. To avoid unnecessary erosion in an earth canal, it is desirable to set the invert of the transition cutoff at the canal invert. Freeboard at the transition cutoff adjacent to concrete canal lining or other hard surface or buried-membrane canal lining is usually the same as that of the lining. For capacities up to 50 cfs this freeboard will usually be 6 inches, and for capacities between 50 and 100 cfs the freeboard will generally range between 6 and 9 inches. In unlined and earth-lined canals the minimum freeboard at broken-back transition cutoffs should be as follows:

Water depth at cutoff, feet	Minimum freeboard, inches
0 to 1.25	6
1.26 to 2.00	9
2.01 to 5.00	12

The value for p is the difference in elevations of the inverts at the transition cutoff and at the headwall opening. The invert at the headwall opening is established by the required submergence of the top of the opening as previously discussed, and the invert at the transition cutoff is assumed to be the same as the canal invert. The p value should not exceed $\frac{3}{4}$D for an inlet transition or $\frac{1}{2}$D for an outlet transition. These dimensions provide maximum floor slopes of 4 to 1 for inlet transitions and 6 to 1 for outlet transitions. If additional transitioning to the canal invert is required, it should be accomplished in the adjacent earth transitions, or with concrete lining for a concrete-lined canal.

Dimension "a" is dependent on the design headwall freeboard and the invert of the opening established by required submergence as previously discussed. The freeboard at the broken-back transition headwall should be as great as or greater than the freeboard shown in the preceding tabulation for freeboard at the cutoff. Headwall freeboard for transitions connected to 24-inch-diameter pipe and smaller may be the same as the freeboard at the cutoff, therefore the tops of broken-back transition walls are level for this pipe diameter range. For larger diameters, the transition headwall freeboard should increase as the size of the structure increases; frequently, freeboard at the headwall will be twice that at the cutoff.

Cutoff dimensions have previously been discussed in section 7-4, and required pipe embedment at the headwall is discussed in chapter VIII.

7-7. ***Type 2 Transition.***—Figure 7-4 shows a typical type 2 transition. Dimensions in the table are for pipe diameters sized for a full-pipe flow velocity of 10 feet per second, and a free-flow pipe with hydraulic control at the inlet transition headwall. A free-flow pipe is common for cross-drainage culvert structures where the water surface at the outlet is usually considerably below the invert of the opening at the inlet headwall. A maximum full-pipe flow velocity of 10 feet per second is permitted for cross-drainage culvert structures having concrete outlet transitions.

To prevent degradation at the inlet, the invert at the transition cutoff is located at or near existing ground surface. Sloping the transition floor lowers the headwall opening, and because the hydraulic control for the design flow is at the inlet headwall, the water surface required to discharge the flow is also lowered.

Inlet sidewalls are flared for three reasons: (1) to produce a more hydraulically efficient entrance condition for the opening (orifice) at the headwall, (2) to provide a width at the cutoff sufficient to insure that the hydraulic control of the water surface is at the pipe entrance, and (3) to provide a greater width at

the cutoff which reduces the likelihood of erosion by reducing the depth and velocity for flows less than design flow. Flaring the outlet sidewalls also allows the water to be released at the cutoff with less likelihood of erosion for partial flows.

The tabulated dimensions (fig. 7-4) provide for freeboard at the inlet headwall which increases as the size of the structure increases. If submergence of the top of the headwall for design flow is not objectionable, the listed transition dimensions may also be used for the design flow for a full-pipe velocity of 12 feet per second. This velocity is allowed if a baffled outlet is used.

To provide adequate freeboard for the canal, the inlet water surface for design flow should be at least 2 feet below the top of the canal bank. The orifice equation, [1] $Q = CA\sqrt{2gh}$ may be used to calculate the inlet water surface required to discharge the design flow. For a type 2 inlet transition, a discharge coefficient, C = 0.6 may be used. The head, h, measured from the centerline of the opening to the water surface for free flow may be conveniently determined by rearranging the orifice equation and making appropriate substitutions:

$$h = 0.0433V^2$$

where V is the design velocity for the pipe.

7-8. *Type 3 Transitions.*—Figure 7-5 shows a typical type 3 transition. Dimensions provided in the table are for capacities from 16 to 70 cfs and pipe diameters of 24 through 36 inches. Full-pipe velocities range from about 5 feet per second for 24-inch-diameter pipe to about 10 feet per second for all pipe diameters listed. The dimensions provide control at the inlet headwall and also freeboard at the headwall for the design capacity and free-flow pipe. A maximum full-pipe flow velocity of 10 feet per second is permitted for cross-drainage culverts having concrete outlet transitions.

To prevent degradation at the inlet, the top of the inlet wall is placed at or near existing ground surface. Lowering the transition floor by an amount equal to B lowers the headwall opening and, because the hydraulic control is at the inlet headwall, the water surface required to discharge the design flow is also lowered.

Structures numbered 24-4, 27-2, 30-2, 33-2, and 36-1 may also be used for capacities greater than those tabulated with resulting full-pipe velocities up to 12 feet per second, provided there is a baffled outlet or a stilling pool for these higher capacities and provided freeboard at the headwall is not required.

To provide adequate canal bank freeboard, the inlet water surface for design flow should be at least 2 feet below the top of the canal bank. The orifice equation [1], $Q = CA\sqrt{2gh}$, may be used to calculate the inlet water surface required to discharge the design flow. For type 3 inlet transitions, a discharge coefficient, C = 0.6 may be used. The head, h, measured from the centerline of the opening to the water surface for free flow may be conveniently determined by rearranging the orifice equation and making appropriate substitutions:

$$h = 0.0433V^2$$

where V is the design velocity for the pipe.

7-9. *Type 4 Transitions.*—Figure 7-6 shows a typical type 4 transition. Dimensions in the table are for pipe diameters sized for a full-pipe flow velocity of 12 feet per second with a free-flow pipe inlet. The dimensions provide control at the inlet headwalls for design capacity and free-flow pipe. A maximum full-pipe flow velocity of 12 feet per second is permitted for cross-drainage culvert structures having baffled outlets or stilling pools.

To prevent degradation at the inlet, the top of the inlet wall is placed at or near existing ground surface. Dropping the transition floor by an amount equal to e, and sloping the transition floor lowers the headwall opening. Because of this and as the hydraulic control is at the inlet, the water surface required to discharge the design flow is also lowered.

Inlet sidewalls are flared to provide a width at the cutoff sufficient to insure that the hydraulic control of the water surface is at the headwall and to provide a greater width at the cutoff which reduces the likelihood of erosion

by reducing the depth and velocity for flows less than design flow.

To provide adequate canal bank freeboard, the inlet water surface for design flow should be at least 2 feet below the top of the canal bank. The orifice equation [1], $Q = CA\sqrt{2gh}$, may be used to calculate the inlet water surface required to discharge the design flow. For a type 4 inlet transition, a discharge coefficient, $C = 0.6$ may be used. The head, h, measured from the centerline of the opening to the water surface for free flow may be conveniently determined by rearranging the orifice equation and making appropriate substitutions:

$$h = 0.0433V^2$$

where V is the design velocity of the pipe.

7-10. *Type 5 Transitions.*—Figure 7-3 shows a typical type 5 transition. These transitions are simply an extension of the concrete canal lining which matches the normal concrete-lined section at one end and has a headwall on the pipe end. These transitions may be used where minimum head loss is not a factor. Figure 7-3 has a table of dimensions for pipes up to 36 inches in diameter. Because of headwall stability considerations, the maximum pipe diameter used with type 5 transitions is 36 inches.

The table of dimensions provide for the following:

1. Full-pipe velocity of 5 feet per second.
2. Transition length equal to 3 pipe diameters or 5 feet minimum.
3. Maximum invert slope of 4 to 1.
4. Inlet pipe submergence of at least 1.5 pipe velocity heads when full-pipe velocity equals 5 feet per second.
5. Pipe submergence at outlet sufficient to cause pipe to flow full.
6. Inlet and outlet freeboard varying from the lining freeboard to about 1.5 feet at the headwall.

7-11. *Earth Transitions.*—Earth transitions may be used for transitioning from a canal section to a canal structure where structure velocities do not exceed 3.5 feet per second. Lengths of earth transitions are usually related to the size of the structure. For pipe structures, inlet and outlet earth transition lengths are both usually equal to 3 pipe diameters or a minimum of 5 feet. For other structures, earth transition lengths are usually 5 feet for relatively small capacity structures and 10 feet for other structures. Invert slopes should not be steeper than 4 to 1 for both inlet and outlet transitions.

Lengths used for earth transitions in conjunction with concrete transitions should be 10 feet long or as otherwise required so that invert slopes are not steeper than the maximum allowable for the type 1 concrete transitions, 4 to 1 for inlets and 6 to 1 for outlets.

B. EROSION PROTECTION

7-12. *Purpose and Description.*—Riprap and gravel protection (fig. 7-8) is often used adjacent to structures and at other locations in earth-surfaced canals where erosion may occur. Local conditions must be considered in determining the type and the amount of protection to be provided. These conditions include the cost of riprap; cost of gravel; danger to structures and crops or to human life should scour occur; rodent damage; type of soil; and velocity of water. The following protection requirements should be used as a guide only. The types shown represent minimum thicknesses and sizes of material to be used, and adjustments should be made to meet the local conditions mentioned above.

Type 1—6-inch coarse gravel
Type 2—12-inch coarse gravel
Type 3—12-inch riprap on 6-inch sand and gravel bedding
Type 4—18-inch riprap on 6-inch sand and gravel bedding

Except for cross-drainage structures, type 3 minimum protection should be used where velocities exceed 5 feet per second, regardless of water depth.

7-13. *Inverted Siphons.*—The following protection is considered minimum for inverted siphons.

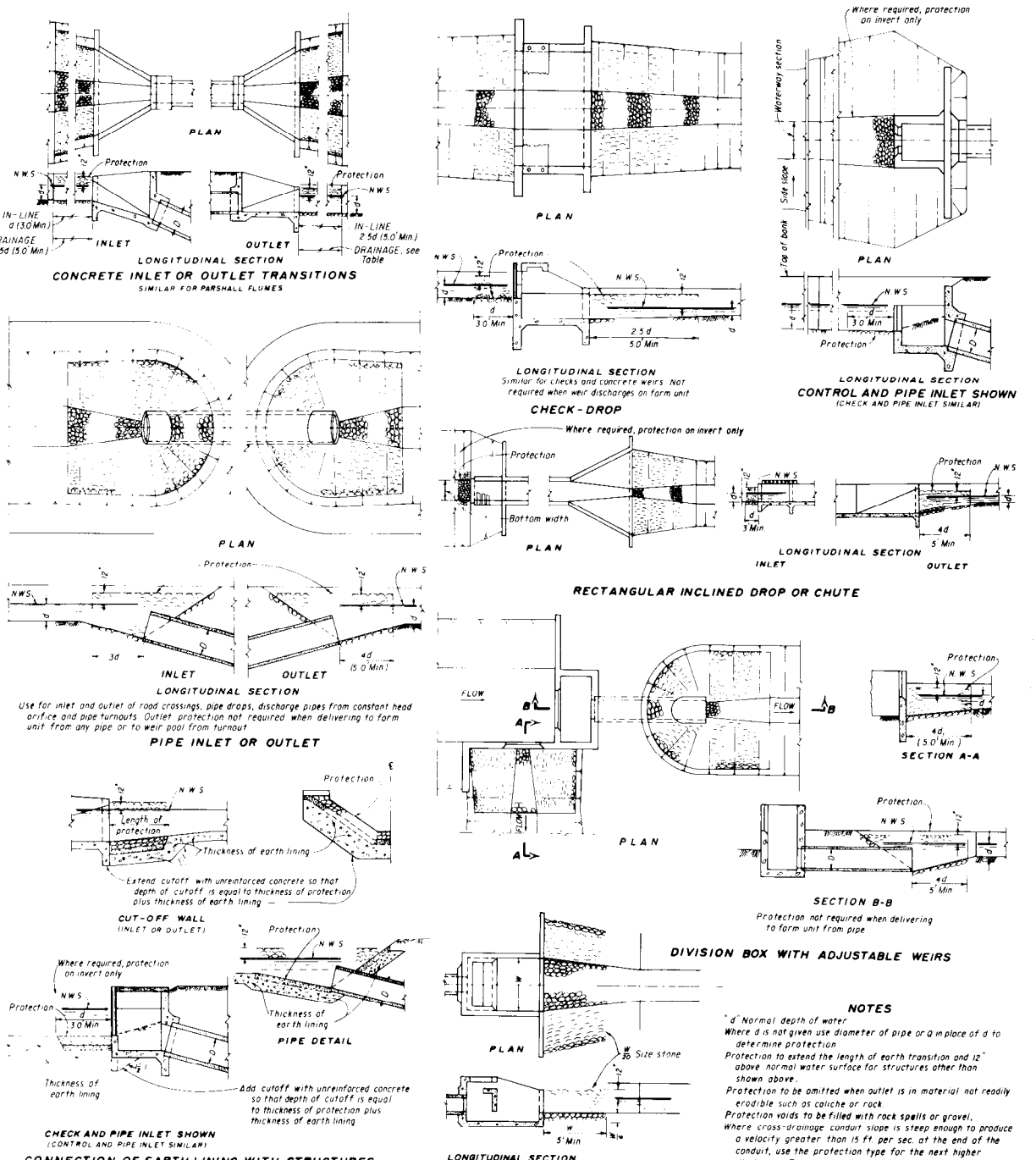

NOTES

"d" Normal depth of water.
Where d is not given use diameter of pipe or Q in place of d to determine protection.
Protection to extend the length of earth transition and 12" above normal water surface for structures other than shown above.
Protection to be omitted when outlet is in material not readily erodible such as caliche or rock.
Protection voids to be filled with rock spalls or gravel.
Where cross-drainage conduit slope is steep enough to produce a velocity greater than 15 ft. per sec. at the end of the conduit, use the protection type for the next higher discharge (Type 3 min.).
Where turbulent water may occur at the outlet of structures other than siphon and cross-drainage, the length of protection should be increased to 4 depths.
Except for cross-drainage structures, type 3 minimum protection should be used where velocity is greater than 5 fps regardless of depth.

MINIMUM REQUIRED PROTECTION

d	SIPHONS		CHECKS, PARSHALL FLUMES, INCLINED DROPS, CHUTES, CHECK AND PIPE INLET, CONTROL AND PIPE INLET, ROAD CROSSINGS, PIPE DROPS, AND TURNOUTS, ETC.		CROSS DRAINAGE STRUCTURES				PROTECTION	
	INLET	OUTLET	INLET	OUTLET	Q (c.f.s.)	INLET	OUTLET	OUTLET LENGTH		
0 to 2.00'	None	None	None	Type 2	0 to 30	None	Type 2	8'	Type 1	6" Coarse gravel
2.01' to 3.50'	None	Type 1	None	Type 2	31 to 90	None	Type 2	12'	Type 2	12" Coarse gravel
3.51' to 7.00'	Type 1	Type 2	Type 1	Type 3	91 to 240	Type 1	Type 3	16'	Type 3	2" Riprap on 6" sand and gravel bedding
									Type 4	18" Riprap on 6" sand and gravel bedding

Figure 7-8. Erosion protection. 103-D-1293

Water depth, feet	Type of protection		Length of inlet protection	Length of outlet protection
	Inlet	Outlet		
0 to 2.00	None	None	--	--
2.01 to 3.50	None	Type 1	--	2.5 depths (5 ft. min.)
3.51 to 7.00	Type 1	Type 2	1 depth (3 ft. min.)	2.5 depths (5 ft. min.)

7-14. *Cross-drainage Structures.*—The following protection is considered minimum for cross-drainage structures with concrete transitions.

Q, cfs	Type of protection		Outlet length, feet
	Inlet	Outlet	
0 to 30	None	Type 2	8
31 to 90	None	Type 2	12
91 to 240	Type 1	Type 3	16

Where the velocity in the conduit is greater than 15 feet per second at the outlet, use the protection type for the next higher discharge (type 3 minimum). Where baffled outlets are provided at the outlet of a structure the protection should be a thickness of $\frac{W}{6}$ with the minimum diameter of rock equal to $\frac{W}{20}$ and extending a distance W (5 feet minimum) beyond the baffled outlet. W is the inside width of the baffled outlet box.

7-15. *Other structures.*—The following protection is considered minimum for Parshall flumes, checks, check-drops, inclined drops, chutes, turnouts, road crossings and pipe drops with the hydraulic control section on concrete, that is, where critical depth does not occur beyond the concrete structure. Where critical depth may occur beyond the concrete, the next higher type of protection should be used at the inlet.

Water depth, feet	Type of protection	
	Inlet	Outlet
0 to 2.00	None	Type 2
2.01 to 3.50	None	Type 2
3.51 to 7.00	Type 1	Type 3

Length of protection for outlets should normally be 2.5 depths (5.0 feet minimum), but where turbulent water may occur at the outlet, the length of protection should be increased to 4 depths. Gates or stoplogs near the outlet increase turbulence.

The rock for riprap and gravel protection should be hard, dense, durable, and should be reasonably well graded. The size range of rock used for 18-inch riprap should have a maximum size of 1/8 cubic yard and a minimum size of 1/10 cubic foot. The size range used for 12-inch riprap should have a maximum size of 1 cubic foot and a minimum size of 1-1/2 inches. The size range used in coarse gravel protection should have a maximum size of 1/8 cubic foot and a minimum size of 3/16 inches.

The 6-inch sand and gravel bedding for riprap should be a continuous layer of sand and gravel or sand and crushed rock, reasonably well graded to a maximum of 1-1/2 inches in size.

C. BIBLIOGRAPHY

7-16. *Bibliography.*

[1] King, H. W. and Brater, E. F., "Handbook of Hydraulics," Fifth Edition, McGraw-Hill Book Co., New York, 1963.